spa drinking fountain

automatic jet flow control
ceramic jet shroud

Spa drinking fountain

to specify/order:

Please use the eight character reference shown below.

spa drinking fountain

Spa drinking fountain assembly, including supply fitting, waste strainer (removable) and hangers **VC4501WH**

applications

Commercial, Education, Other.

material

Vitreous china.

colours

White WH.

fixings

The fountain is fitted with an automatic jet flow control and will operate at between 1 bar and 6 bar water pressure without any need for manual control. The jet is positioned above the spillover level of fountain (25mm air gap). Assembly comprises pottery bowl, pair of concealed wall hangers, chrome plated jet with push control.
Self closing valve with constant flow pressure regulator, inlet strainer and 1¼" chrome plated grid waste. It is recommended that this fountain is serviced annually or after long periods of inactivity (e.g. holiday).

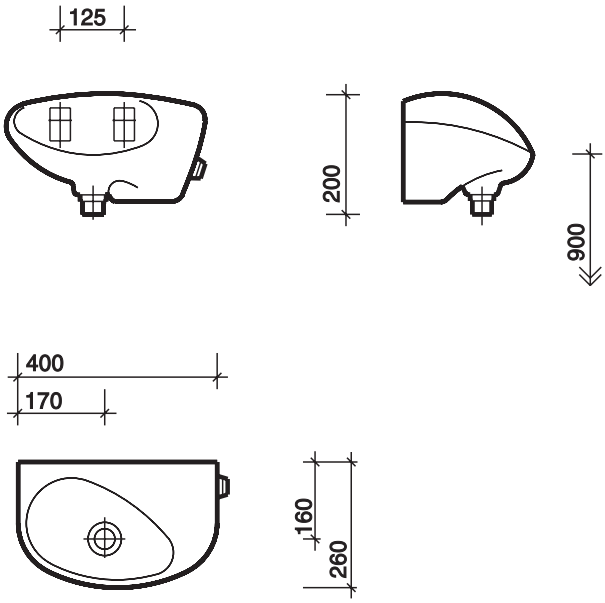

all measurements shown are in millimetres. drawing sizes are not to scale.

Lawton Road, Alsager, Stoke-on-Trent ST7 2DF, UK
Tel: +44(0) 1270 879777 Fax: +44(0) 1270 873864
www.twyfordbathrooms.com UK Technical Helpline Tel: 0870 840 0437 Fax: 0870 840 0438

Twyford bathrooms

For latest prices and delivery to your door visit MyTub Ltd - www.mytub.co.uk - info@mytub.co.uk