POWERSAVER Range

Product: PSW

The Powersaver Weekly is a simple to use, multi application time switch.
Although primarily used for the control of water heating, the PSD can also be used for a multiude of applications including the control of panel heaters, security lighting or combi boilers.

An electronic 5 day/2 day controller with the advantages of the Daily model in addition to 3 alternative operations on SAT/SUN.

One of the main benefits of the Powersaver Weekly product is its standard size.
This is common to all models, which fit directly onto a single gang patress box.
This allows installation or upgrading from one model to another, quick and simple.

The Powersaver family saves on fuel expenditure and energy wastage by automatically switching off when the user may forget.

Product Specification

Contact Rating	16A Resistive 240V a.c.
Supply	230V 50/60 Hz a.c.
Fixing	Single Patress - Surface and Flush Mounting
Resolution of Programs	10 Minutes
Power Consumption	10VA Maximum
Live Parts Protection	This unit is totally protected by the enclosure
Dirt and Moisture Protection	IP00
Shock Protection	Class 1 (this unit must be connected to earth)
Case Material	Polycarbonate
Type of Action	Type 1B
Temperature Rating	T35
Operation Temperature	0°C to 35°C
Memory Reserve	4 Hours - when on power for previous 12 hours
Display	LCD
Program Settings	Max.3 Operations (Mon-Fri), Max 3 Operations (Sat-Sun)
Boost Settings	User selectable - 1/2, 1 or 2 hours
Control Pollution Category	Normal

switched on solutions
SANGAMO
Sales Office Direct Line : 0845 006 6206 Fax: 01475 744567 Email: enquiries@sangamo.co.uk

For latest prices and delivery to your door visit MyTub Ltd - 0845 303 8383 - www.mytub.co.uk - info@mytub.co.uk

POWERSAVER Range

Product: PSW

Wiring Diagram

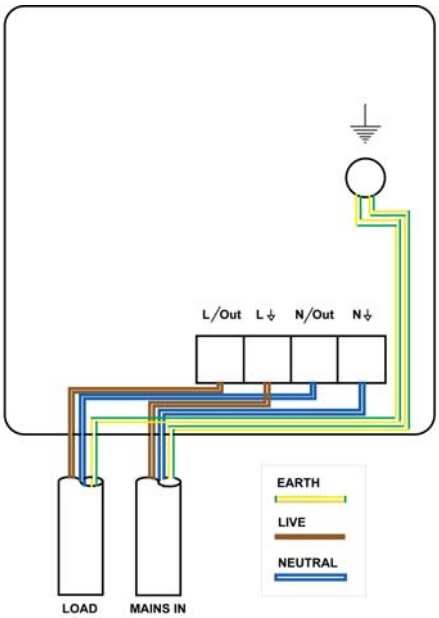

Dimensions

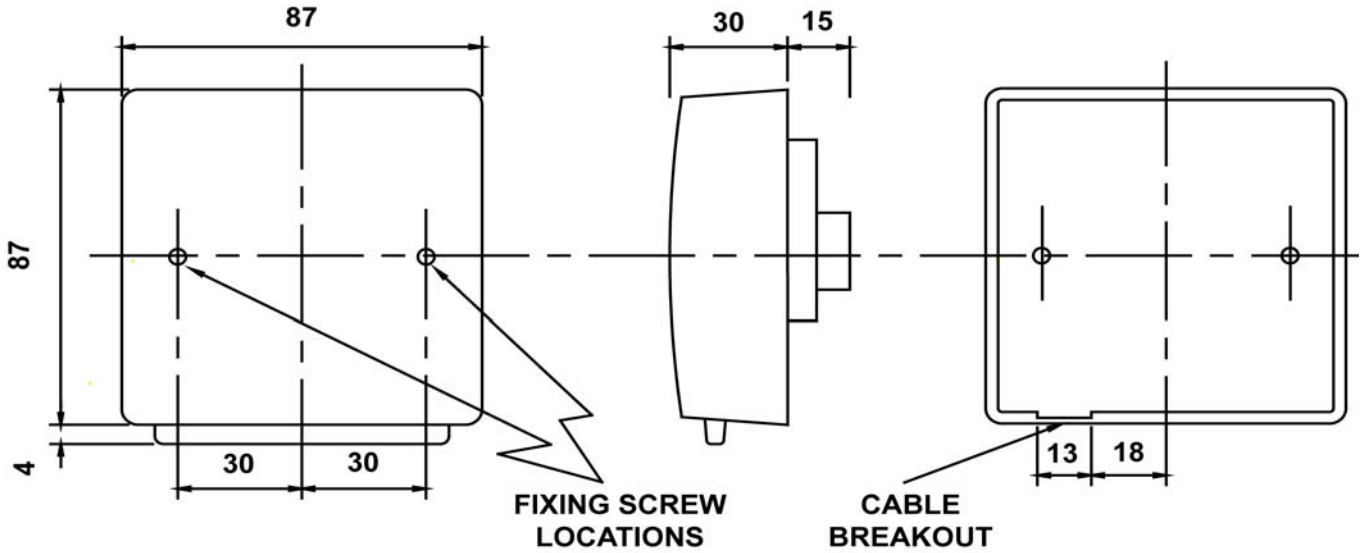

(Dimensions in "mm")

switched on solutions
SANGAMO
Sales Office Direct Line : 0845 006 6206 Fax: 01475 744567 Email: enquiries@sangamo.co.uk

For latest prices and delivery to your door visit MyTub Ltd - 0845 303 8383 - www.mytub.co.uk - info@mytub.co.uk