Reliance WATER CONTROLS™

Product Specification Sheet

Automatic Air Vent

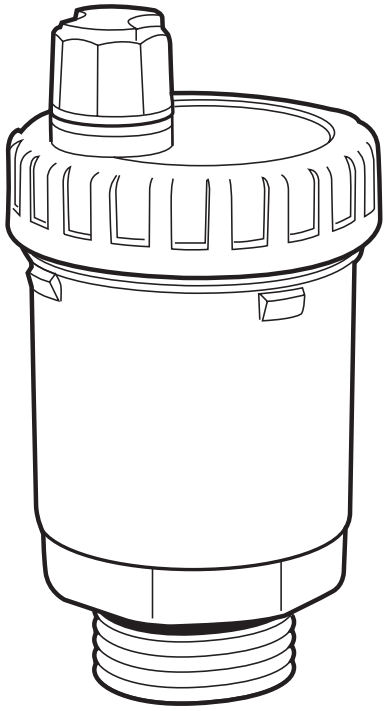

A 1/2” or 3/8” combination automatic air vent for use with sealed heating systems.

Product Features and Benefits

- Automatically vents trapped air from within a sealed heating system.
- **Saves time and cost when commissioning** new heating systems.
- Solid brass construction and heat resistant polypropylene float give **long life and dependability**.
- Available in 3/8" and 1/2" connections.
- **Reduces call backs** to rectify air locks, **saving time and money**.

For latest prices and delivery to your door visit MyTub Ltd - 0845 303 8383 - www.mytub.co.uk - info@mytub.co.uk

Automatic Air Vent

Description
High quality automatic air vents for use in heating systems to vent air when commissioning a system. The device is available with either 3/8" or 1/2" MBSP connection.
The device consists of a polypropylene float connected to a simple valve. When the build-up of air within the float chamber exceeds a certain level the float drops, opening the valve and releasing the air trapped within the chamber. As the air is released, water replaces it, and moves the float back into the up position, which closes the valve.
For larger systems requiring a higher capacity of air relief and/or continuous venting it is suggested that a Reliance high capacity air separator (ASEP 192 001-005) be used.

Product Range
AVEN 100 001: 3/8" Automatic Air Vent
AVEN 100 005: 1/2" Automatic Air Vent

Materials
Body: Standard brass
Cap: Standard brass
Float: Heat resistant polypropylene

Installation
The air vent should be installed in a vertical position as its operation is based on the vertical movement of the float.

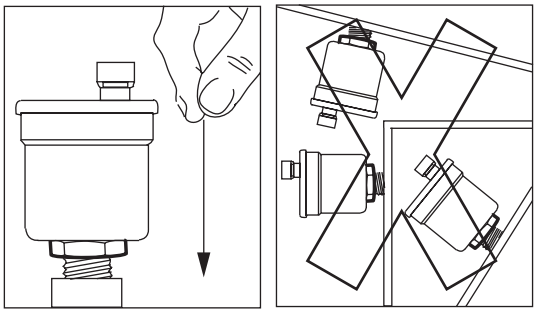

Dimensions
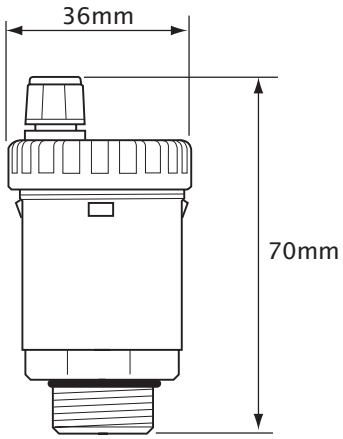

Specifications
Maximum working pressure:	10 bar
Maximum working temperature:	110ºC

How to Specify
A solid brass automatic air vent for use in sealed heating systems, available in 3/8" or 1/2" MBSP connection formats (include correct product range code).

Guarantee
All Reliance® products undergo strict performance tests prior to despatch, and are guaranteed against faulty materials and workmanship for one year from the date of purchase. This is in addition to any statutory rights.

Contacts:	Sales Enquiries	Technical Support
Telephone:	+44 (0)1386 712400	+44 (0)1386 47148
Fax:	+44 (0)1386 47028	+44 (0)1386 422217
E-Mail:	sales@rwc.co.uk	technical@rwc.co.uk

Reliance Water Controls®
Worcester Road, Evesham,Worcestershire, WR11 4RA, UK
Tel: +44 (0)1386 47148 Fax: +44 (0)1386 47028 www.rwc.co.uk

RWC reserves the right to make changes to the product which may affect the accuracy of information contained in this leaflet

© Reliance Water Controls® Sept 2005

For latest prices and delivery to your door visit MyTub Ltd - 0845 303 8383 - www.mytub.co.uk - info@mytub.co.uk