HEATRAE SADIA

The quality name in water heating

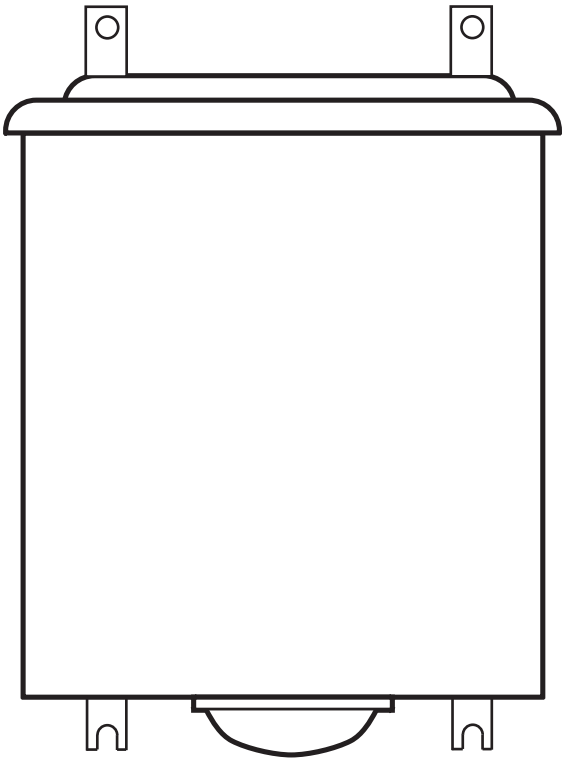

FBM RANGE

Fitting Instructions and User Guide

rices and delivery to your door visit MyTub Ltd - 0845 303 8383 - www.mytub.co.uk - info@mytu

NOTICE TO INSTALLER

These water heater have a built in cold water feed cistern and float valve and can supply a number of hot water outlets. As the hot water flows by gravity the water heater must be mounted higher than the taps they serve. Ideally the heater should be fitted close to the point where hot water is required most frequently. pipe runs sholud be kept to a minimum.

The installation must be carried out in accordance with the relevant requirements of:

- The appropriate Building Regulations either The Building Regulations, The Building Regulations (Scotland) or Building Regulations (Northern Ireland).
- The Water Fittings Regulations or Water Byelaws in Scotland.

SITING THE HEATER

The FBM Range is suitable for wall mounting only. Ensure that the wall is capable of supporting the full weight of the water heater (see chart).

Mount the water heater as higher as possible, the top of the water heater must be at least 1.2 m (4 feet) above the highest draw off point to ensure a reasonable pressure, allowing 225mm (9”) above the heater for access to the cistern tank. DO NOT install in a position where the heater is liable to be subjected frost conditions.
Refer to Fig. 1 and Dimension Chart for fixing centres. A template is also supplied with the FBM25 and 50.

FBM 25 and 50:

- Using the template provided, mark off fixing positions of the two top holes (ensuring that they are level).
- Drill and plug these positions.
- Screw in fixing bolts leaving underside of head 12mm from wall.
- Hang heater onto fixing bolts ensuring they engage in keyhole slots.
- Mark bottom centre fixing (access is easier if terminal cover is removed).
- Remove heater, drill and plug this position.
- Replace heater onto keyhole slots, secure by screwing in bottom fixing bolt.

rices and delivery to your door visit MyTub Ltd - 0845 303 8383 - www.mytub.co.uk - info@mytu

FBM 75 and 125:

- Mark positions of two bottom fixing points (ensure heater is level).
- Drill and plug these positions.
- Screw in fixing bolts leaving head 5mm from wall.
- Locate slotted bottom fixing brackets onto fixing bolts, mark top two fixing positions.
- Remove heater, drill and plug these positions.
- Replace heater onto bottom fixing bolts, secure by screwing in top fixing bolts.
- Tighten bottom fixing bolts.

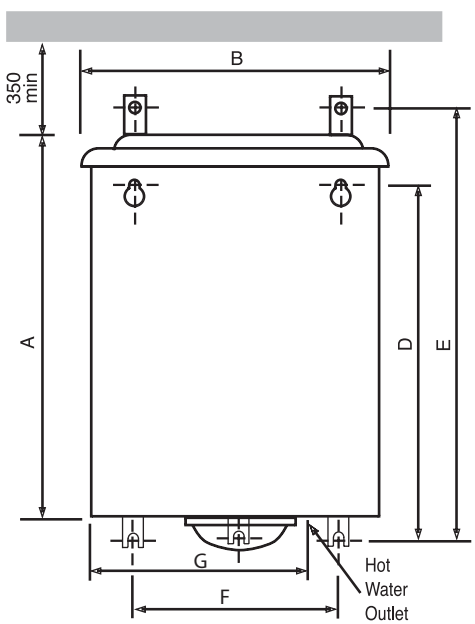

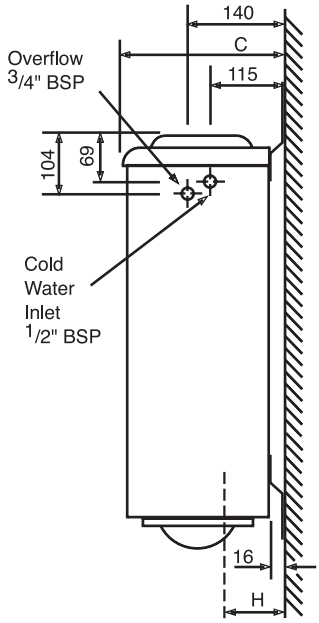

Model	Weight Empty	Full	A	B	C	D	E	F	G	H
	kg	kg	mm	mm	mm	mm	mm	mm	mm	mm
FBM25	19	59	682	609	250	657	-	445	456	84
FBM50	30	95	974	609	250	949	-	445	456	84
FBM75	36	131	1076	610	295	-	1132	445	456	106
FBM125	48	213	962	729	429	-	1001	565	590	102

rices and delivery to your door visit MyTub Ltd - 0845 303 8383 - www.mytub.co.uk - info@my

WATER REGULATIONS

To meet the requirements of the Water Supply (Water Fittings) Regulations 1999, Water Byelaws 2000, Scotland and the Water Regulations Northern Ireland.

1 A servicing valve shall be installed on the inlet pipe adjacent to the storage cistern. Schedule 2 - Section 16(2).
2 A servicing valve shall be installed on the outlet pipe of the storage cistern. Schedule 2 - Section 16(3).

WATER CONNECTION (Refer to Fig.1)

Mount the water heater in the desired position in accordance with the above requirements. The Float Valve, Overflow fitting, Dip Tube and Screened Vent are supplied loose within the cistern tank. Remove the cistern cover, assemble the Float Valve body, arm and float. The Float Valve can be mounted on either the left or right of the heater by cutting a suitable hole using the pre-punched holes in the outer case as a guide. Use a sharp hollow punch, hole saw or cutter and ensure the hole edge is clean and free from notches and swarf. Secure Float Valve to the cistern tank wall. NOTE washer should be between valve body and cistern wall, secure by tightening backnut on outside of heater. The Overflow fitting can also be mounted on the left or right by drilling the appropriate position as for the Float valve.Attach the Overflow fitting with the filter screen housing to the outside of the heater, the washer and backnut should be assembled from inside the cistern tank. The Dip Tube should be pushed into the Overflow fitting inside the cistern tank such that the lower edge of the tube will be immersed when the cistern is filled with water. The Screened Vent should be snapped into the prepared hole in the cistern cover, when fitting support the material around the hole to avoid damaging the cover.

The Float Valve is suitable for inlet pressures up to 7bar (100 p.s.i.), therefore it is recommended that the cold water supply is taken from the mains. For higher pressures the float should be replaced by one of 6” diameter. The Float Valve is threaded 1/2.BSP (for 15mm pipe).

The Overflow is fitted with a mesh screen to prevent the ingress of insects. The connection to the overflow pipe is 22mm compression for 22mm o/d pipe. The overflow pipe must be laid to a continuous fall and terminate in a position where it can be readily seen.

rices and delivery to your door visit MyTub Ltd - 0845 303 8383 - www.mytub.co.uk - info@mytu

The outlet fitting is located on the underside of the heater and is threaded 3/4.BSP Female on the FBM25, 50 and 75, and 1”BSP Female on the FBM125.

A Drain fitting is provided and is located on the element plate assembly under the terminal cover. Ensure the electrical supply is disconnected before removing the terminal cover and draining the heater.

To fill the heater the cold water supply should be turned on and a hot outlet supplied by the heater opened. When water flows from the outlet, turn off and allow cistern tank to fill. Adjust the float such that the Float Valve closes

when the water level in the cistern corresponds with the marked water level line. After adjustment replace the cistern cover and secure using the cover screw(s) provided.

ELECTRICAL CONNECTION

WARNING This appliance must be earthed. Installation must conform with current IEE Wiring Regulations. It should be connected to a 230/240V a.c. electrical supply via a double pole isolating switch with a minimum 3mm contact separation in both poles. The supply cable must have a minimum cross sectional area of 1.5mm² for each element. NOTE 6kW units have two elements.

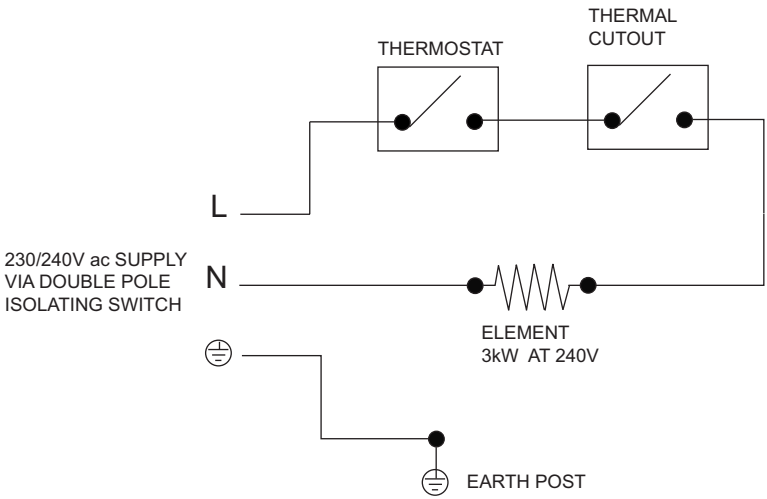

Fig 2. Schematic Wiring Diagram 3kW units

rices and delivery to your door visit MyTub Ltd - 0845 303 8383 - www.mytub.co.uk - info@mytu

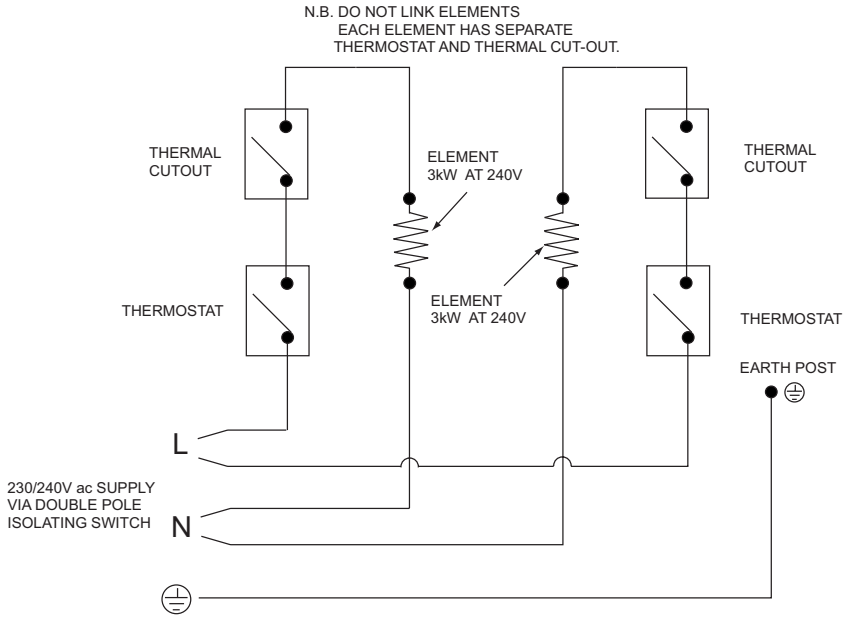

Fig 3. Schematic wiring Diagram 6kW units

The cable entry is suitable for flexible cable or conduit connection and is located on the left hand side of the terminal cover. Remove the terminal cover by removing the fixing screws.

Flexible cable: Strip the outer sheath and insulation of the cable to the required lengths ensuring that the outer sheath will be held in the cable grip when the connections are made.

Conduit: The cable entry hole has a diameter of 20mm to accept standard 20mm conduit.
The conductors should be connected as follows (see Fig. 2 or 3).

Live (coloured Brown or Red) to THERMOSTAT termination marked L.
Neutral (coloured Blue or Black) to ELEMENT termination marked N.
Earth (coloured Green/Yellow or Green) to EARTH POST marked ⏚ .
If Twin and Earth cable is used the bare Earth conductor must be sleeved.

Ensure all electrical connections are tight. If using flexible cable secure by clamping the outer sheath in the cable grip and tightening cable grip top bar. Replace the terminal cover ensuring the shakeproof washers are in position under the head of the fixing screws.

rices and delivery to your door visit MyTub Ltd - 0845 303 8383 - www.mytub.co.uk - info@mytu

DO NOT switch on electrical supply until the heater is full of water.

THERMOSTAT

An adjustable Cotherm TSD rod type thermostat is fitted. This should be set during installation by rotating the setting dial with a small screwdriver to the maximum position, marked by “+”, and then turning back 45º. The maximum setting is 70ºC and the minimum is 18ºC. Settings below 65ºC are recommended in hard water areas to minimise the build-up of scale. After the first heating cycle check the water temperature and adjust the thermostat as necessary.

OVER-TEMPERATURE CUT-OUT

The FBM heater is fitted with manually resettable over-temperature protection. In the event of the unit overheating due to a thermostat malfunction or setting too high the Over-temperature Cut-out(s) will interrupt the power to the element(s). On 3kW units the Over-temperature Cut-out is adjustable and should be set approx. 15ºC above the control thermostat setting. The maximum Over-temperature Cut-out setting should be 85ºC. The 6kW units have two fixed temperature Over-temperature Cut-outs, one protecting each element. If the Over-temperature Cut-out(s) operate the element(s) will remain off until the Over-temperature Cut-out(s) are reset. Do not reset the Thermal Cut-out(s) until the cause of operation has been investigated.

To re-set, DISCONNECT THE ELECTRICAL SUPPLY BEFORE REMOVING THE TERMINAL COVER, remove terminal cover, check the operation of the Thermostat and reduce its temperature setting or replace if faulty. Press the RESET button on Over-temperature Cut-out(s) (black on 3kW units, red on 6kW units), replace the terminal cover before switching on electrical supply.

SPARE PARTS

Should a fault occur or maintenance be required on the heater a full range of Spare Parts is available. Please contact either your Distributor or Heatrae Sadia for further information.

rices and delivery to your door visit MyTub Ltd - 0845 303 8383 - www.mytub.co.uk - info@mytu

Guarantee

Goods are Guaranteed and sold subject to our standard conditions of sale. A copy of these conditions will be supplied on application.

The inner container of the FBM is guaranteed for five years against faulty manufacture or materials provided that:
It has been correctly installed as per the instructions contained in the instruction manual and all relevant Codes of Practice and Regulations in force at the time of installation.
It has not been modified in any way, other than by Heatrae Sadia Heating.
The damage is not due to scale or freezing.
It has only been used for the storage of category 1 or 2 water.
It has not been tampered with or been subjected to misuse or neglect.
Within 60 days of installation the user completes and returns the certificate supplied along with the proof of purchase to register the product.

The FBM immersion heater, thermal controls and ball valve are guaranteed for two-years against faulty manufacture or materials from the date of purchase. Evidence of purchase and date of supply must be submitted.

This guarantee does not affect your statutory rights.

In the event of the unit being returned under guarantee it should be despatched directly to your supplier and not to Heatrae Sadia Heating together with details of the installation and proof of purchase and/or installation date.

This guarantee does not affect the statutory rights of the consumer.

Environmental Information

This product is manufactured from many recyclable materials. At the end of its useful life it should be disposed of at a Local Authority Recycling Centre.

HEATRAE SADIA
The quality name in water heating
Heatrae Sadia Heating
Hurricane Way Norwich NR6 6EA
www.heatraesadia.com
A division of BAXI GROUP

Main No:	01603 420100
Main Fax:	01603 420218
Sales:	01603 420110
Sales Fax:	01603 420149
Service:	08701 600125
Service Fax:	08701 600181

36005142 issue 8

rices and delivery to your door visit MyTub Ltd - 0845 303 8383 - www.mytub.co.uk - info@mytu