HEATRAE SADIA

Electromax

Combined electric boiler and domestic hot water store

For latest prices and delivery to your door visit MyTub Ltd - 0845 303 8383 - www.mytub.co.uk - info@mytub.co.uk

Electromax

Electromax provides efficient electric wet central heating and domestic hot water with the comfort and control of gas-powered systems, making it a perfect solution for over two million homes in Britain with no mains gas supply.

Electromax includes a programmable room thermostat to take full advantage of off-peak electricity rates. It uses standard radiators and thermostatic radiator valves to reduce the cost of installation. To complement the range an underfloor heating version is also available. With long-term costs in mind, there is no need for the considerable expense and inconvenience of an annual gas safety certificate.

Electromax comes with a 10 year cylinder guarantee and a two year guarantee for the boiler and all other controls with on-site service support.

For latest prices and delivery to your door visit MyTub Ltd - 0845 303 8383 - www.mytub.co.uk - info@mytub.co.uk

Electromax

Electromax has a host of features that benefit developers, builders, installers, landlords and end users to make it a desirable alternative where gas is not available or not the preferred option.

- Controllable, efficient wet central heating.
- Programmable room thermostat to accommodate a wide range of off-peak tariffs.
- Uses standard radiators and thermostatic radiator valves.
- Designed for sealed systems.
- Model available for underfloor heating systems.
- High-performance domestic hot water from unvented direct hot water cylinder.
- Cylinder manufactured from Duplex stainless steel.
- No flue and no fuel tanks allow flexible installation location.
- Silent in operation.
- Automatic pump exercise feature – for periods when boiler is switched off.
- Front control panel indication to show boiler status.
- Proven solid-state technology for long life.
- Soft start and zero volt switching to avoid power surges.
- Min / max control adjusts the water temperature output from the boiler.
- Minimal service and maintenance costs.
- No requirement for annual gas safety certificate.
- On-site parts and labour guarantee.
  - Cylinder – 10 years.
  - Boiler and other controls – two years.

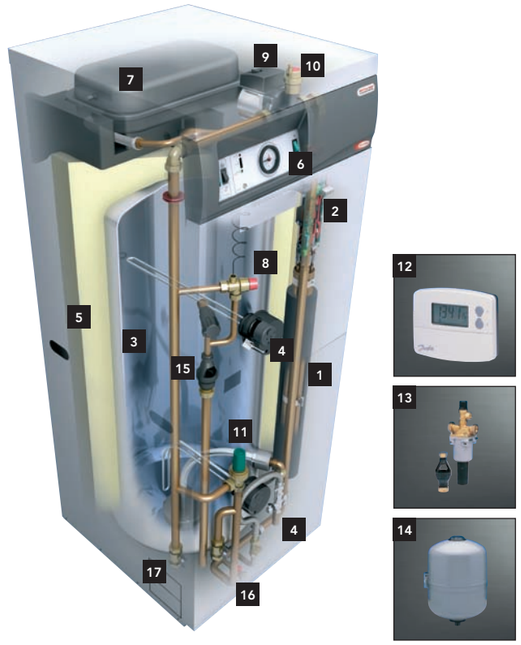

Key components

1 6 or 9kW Amptec boiler.

2 Controls (PCBs).

3 180 litre cylinder (Duplex stainless steel).

4 Elements – alloy 825 sheathed, incorporating thermal controls – combined thermostat and thermal cut-out. Thermostat adjustable between 10°C and 70°C.

5 Insulation – CFC/HCFC Free (ODP zero) expanded polyurethane.

6 User interface controls mounted in stylised facia panel.

7 Expansion vessel.

8 Pressure relief valve.

9 Circulating pump.

10 Auto air vent.

11 Automatic bypass valve.

12 Programmable room thermostat.

13 Combined pressure reducing / strainer / check / expansion valve.

14 Externally mounted potable water expansion vessel (18 litre) supplied with wall mounting bracket.

15 Tundish.

16 Drain valve.

17 Primary system isolating valves.

Central heating

Electromax is suitable for use with wet radiator or underfloor sealed heating systems. Typical system layout given below is for illustrative purposes only.

Electromax installation

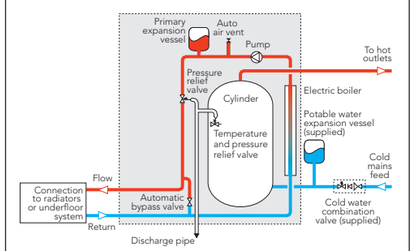

Domestic hot water

Domestic hot water is provided by a 180 litre unvented direct hot water cylinder which is manufactured from Duplex stainless steel for maximum strength and long life. Duplex stainless steel offers a superior resistance to corrosion especially in aggressive water areas, compared with copper, glass-lined steel and some lower grades of stainless steel.

Because Duplex is a low carbon, high chromium content alloy, it resists all forms of corrosion including pitting, crevice corrosion, uniform corrosion and stress corrosion cracking, without the use of a sacrificial anode. In addition, the combination of tungsten inert gas and laser welding coupled with the special post-weld processes ensures the same level of corrosion resistance and mechanical strength as the parent metal. This ensures the longest possible working life for every cylinder.

The water is heated by long-life Superloy 825 alloy sheathed elements incorporated into an easily removable heater plate, making replacement simple, if necessary.

Electromax is supplied with a programmable room thermostat which controls the time periods that the boiler comes into operation and the room temperature. Offering up to three 'On' and three 'Off' periods per day and Weekday and Weekend programmes, the user is able to take advantage of the most appropriate off peak tariff best suited to their needs.

The control panel on the unit includes a system pressure gauge, boiler indicator LEDs, boiler on / off switch, domestic hot water on / off and boost switches.

Running costs

There are a number of off-peak electricity tariffs now available which provide a range of lower cost options for electricity used for heating and hot water. The two most common tariffs are Economy 7 and Economy 10. Types of meter and tariffs will vary by property and region. The following information is for general guidance only.

Economy 7

Two rate meter installed in property. Units used at night (during off-peak time*) charged at lower rate than those used during the day.

Economy 10†

Only one meter installed in each property. All electricity used at off-peak times charged at the lower rate (such as washing machines, dishwashers etc). Off-peak times generally set for midnight–5.00am; 1.00pm–4.00pm; and 8.00pm–10.00pm.

*"Night" means the 7 hours that the local distribution company in your area chooses between 10pm and 10am. "Day" means at all other times. †Not available in all areas, and details may vary by area.

For latest prices and delivery to your door visit MyTub Ltd - 0845 303 8383 - www.mytub.co.uk - info@mytub.co.uk

Full specifications

Specification

Capacities
Boiler – 1.3 litres.
Cylinder – 180 litres.

Ratings
Boilers – 6kW @ 240V (5.5kW @ 230V).
– 9kW @ 240V (8.3kW @ 230V).
Immersion heaters – 2x 3kW @ 240V (2x 2.8kW @ 230V).

Elements
Boiler – Long life, low watts density, copper elements in a copper heat exchanger.
Cylinder – Long life Superloy 825 alloy sheathed elements incorporated into an easily removable heater plate should replacement be necessary.

Outer casing
White stove-enamelled corrosion-resistant steel.
Control Panel fascia – light grey ABS.

Thermal insulation
Boiler: Armaflex – closed cell insulation. Dust, fibre and CFC / HCFC free (ODP zero).
Cylinder – CFC / HCFC Free (ODP zero) expanded polyurethane. GWP 2.72 (Global Warming Potential).

Thermostat
Electromax boiler – Electronic dual control, user adjustable from 65°C to 80°C.
Electromax underfloor boiler – Electronic dual control, user adjustable from 30°C to 60°C.
Electromax cylinder – element thermostat adjustable from 10°C to 70°C.

Water container
Boiler – Copper.
Cylinder – Duplex 2304 (Grade 1.4362 EN 10088) stainless steel with external expansion vessel.

Safety features
Boiler – 2 amp fused pump supply, dual control circuits, dual switching of the elements, self-check circuitry and fault indication. Resettable thermal cut-out.
Cylinder – Manually resettable cut-out on heating element operates at 85°C (feature is an integral part of the thermostat).

Primary circuit
Pressure relief valve factory set to 3 bar. Cylinder fitted with temperature and pressure relief valve, factory-set to operate at 10 bar / 90°C.

Pump
Grundfos UPS15-50 (with integral automatic air vent).

Expansion vessels
Primary system expansion vessel (12 litre / 3 bar) factory fitted. Potable water expansion vessel (18 litre / 3.5 bar) supplied loose.

Bypass valve
Automatic bypass valve (factory-fitted).

Central heating controls
Supplied with programmable room thermostat – three 'On' / three 'Off' periods per day. Weekday and weekend can be programmed separately. Battery operated. Polarity-free connection to boiler.

Approvals
Nemko approved, CE marked.
Manufactured in the UK in a BS EN ISO 9001:2008, ISO 14001:2004 and BS OHSAS 18001:2007 registered factory.

Installation

Must be installed by a competent installer in accordance with Local Regulations.
England and Wales – Building Regulations G3.
Scotland – Technical Standards P3.
N.Ireland – Building Regulations P5.

Fixing
Floor-mounting. A template is provided to assist in positioning.

Plumbing connections
22mm pipework on connections on all models. Primary filling loop and primary drain point valve and hose connector supplied, bottom or side entry via panel knock outs.

Primary system operating pressure
3 bar maximum.

Operating temperature
Primary system – Electromax from 65°C to 80°C.

Primary system – Electromax Underfloor from 30°C to 60°C. Cylinder from 10°C to 70°C.

Heating systems
Sealed systems.

Pressure testing
Tested to 15 bar.

Cold water control
Integrated cold water control set comprising pressure reducing valve and strainer (factory set at 3.5 bar), expansion relief valve (factory set at 6 bar) and check valve. 22mm compression fittings.

Domestic hot water flow rates
Up to 55 litres per minute @ 6 bar pressure.

Min water requirements
Recommended minimum supply pressure – 1.5 bar/20 l/min flow rate. If there are any doubts about water supply pressure or flow rates, please contact our Specification Advice Team to discuss.

Tundish
Factory-fitted 15mm inlet and 22mm compression outlet.

Electrical
Designed for connection to off-peak electricity supply. A range of off-peak tariffs are available nationally – it is recommended that you contact your electricity supplier to determine the tariff best suited to your needs.

Electric boiler must be permanently connected to electricity supply through a double pole linked isolating switch with a minimum breaking capacity of 45 amps.

Immersion heaters must be permanently connected to electricity supply through a double pole linked isolating switch with a minimum breaking capacity of 13 amps.

Central heating control is by means of a programmable room thermostat (supplied loose for fitting on site).

User controls
The unit is supplied with a programmable room thermostat for the control of the central heating times and temperature.

Control panel
Boiler on / off switch. Hot water on / off switch.
Hot water one hour boost switch. System pressure gauge. Boiler temperature adjustment. Boiler LED indicators.

Guarantee

The Electromax Duplex stainless steel vessel carries a full 10 year guarantee against faulty manufacture or materials provided that:

- It has been correctly installed as per the instructions contained in the instruction manual and all relevant Codes of Practice and Regulations in force at the time of installation.
- It has been installed in the UK.
- It has not been modified in any way, other than by Heatrae Sadia Heating.
- It has not been frost damaged.
- It has only been used for the storage of potable water.
- It has not been tampered with or been subjected to misuse or neglect.
- Within 60 days of installation the user completes and returns the certificate supplied along with the proof of purchase to register the product.

The boiler, immersion heater and controls are guaranteed for a period of two years from the date of purchase provided that:

- It has been correctly installed as per the instructions contained in the instruction manual and all relevant Codes of Practice and Regulations in force at the time of installation.
- It has been installed in the UK.
- It has not been modified in any way, other than by Heatrae Sadia Heating.
- It has not been frost damaged.
- It has not been tampered with or been subjected to misuse or neglect.
- Within 60 days of installation the user completes and returns the certificate supplied along with the proof of purchase to register the product.

Evidence of purchase and date of supply must be submitted. These guarantees do not affect your statutory rights.

Dimensions and ordering

Dimensions

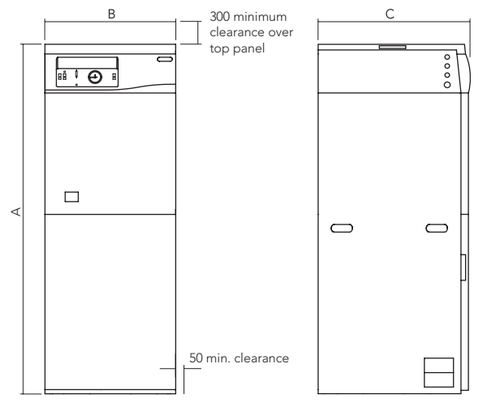

Model	A (mm)	B (mm)	C (mm)
Electromax / Electromax Underfloor	1480	550	605

Cylinder performance

Model	Capacity (litre)	Off-peak heater 3kW Time to heat (mins) Thro' 45°C	Thro' 50°C	Boost heater 3kW Quantity heated thro' 45°C in 60 mins	Heat loss kWh/24h
Electromax	180	180	200	57 litres	1.95
Electromax Underfloor	180	180	200	57 litres	1.95

Ordering guide

Model	Rating @ 240V Boiler	Cylinder	Capacity (litre) Boiler	Cylinder	Weight (kg) Empty	Full	Product code
Electromax	6kW	2x 3kW	1.3	180	74	256	95:022:204
Electromax	9kW	2x 3kW	1.3	180	74	256	95:022:203
Electromax Underfloor	6kW	2x 3kW	1.3	180	74	256	95:022:304
Electromax Underfloor	9kW	2x 3kW	1.3	180	74	256	95:022:303

For latest prices and delivery to your door visit MyTub Ltd - 0845 303 8383 - www.mytub.co.uk - info@mytub.co.uk

Electromax solar

Solar energy is a free, natural and inexhaustible resource that we can exploit as the technology to do so becomes more affordable. Electromax Solar is a prime example of this new eco-friendly technology.

Electromax Solar, combined electric boiler and domestic hot water store, uses a sustainable energy source which is free and natural. Providing an attractive lower carbon option for specifiers, developers, home owners and tenants alike the Electromax Solar reduces the amount of electricity required to generate domestic hot water. In addition to reducing carbon emissions, real cost savings can be made over the medium and long term when switching to sustainable energy sources.

Whether in rural areas, new housing projects, multi-floor dwellings or one of the two million homes in Britain with no mains gas supply, Electromax Solar offers the best solution for comfort and convenience of wet central heating. The benefits of domestic solar thermal hot water are powerful mains pressure showering and faster filling baths.

With the same comfort and controllability as a gas boiler, Electromax Solar provides central heating only when required and is controlled by a programmable room thermostat which can be set to take advantage of off-peak electricity tariffs and meet end user life styles. It is available in both radiator and underfloor options.

The Electromax Solar is ideal for a range of domestic properties and especially suited where there is no mains gas supply. An installation template is supplied to enable pipework to be pre-installed prior to siting the boiler.

Electromax Solar is a fully packaged unit and comes complete with a 9kW electric boiler, Duplex stainless steel solar thermal hot water cylinder (available in 185, 220 or 250 litre capacities) with a specially designed solar coil for maximum heat input and efficiency, a pre-plumbed factory-fitted circulating pump, service isolation valve, central heating and solar domestic hot water controls.

Both the solar hydraulic pump and solar controller are fully integrated into the Electromax Solar resulting in a quick and neater installation ready for connection to solar collectors. They are operated by a clear, multifunctional and easy to use control panel with an integrated LCD display.

To complete the solar thermal installation, a choice of in-roof and on-roof flat plate solar collector kits are available. Every kit is supplied with primary solar system fluid, 24 litre solar rated expansion vessel and connecting pipe kit.

Supported by our national service and technical support network, Electromax Solar features a 10 year on-site parts and labour guarantee on its stainless steel cylinder and two years on the boiler and controls. A specification and design service is available through our Specification Advice Team on Tel: 01603 420220.

The Electromax Solar has a host of features which benefit developers, builders, installers, landlords and end users to make it a desirable alternative where gas is not available or not the preferred option.

- The Electromax Solar unvented hot water cylinder, manufactured from high grade Duplex stainless steel, is insulated with polyurethane foam.
- The primary domestic hot water heat source is solar energy via a solar coil heat exchanger.
- Cylinder sizes and solar volumes have been specifically designed to meet SAP* requirements for 1, 2 and 3 bedroom properties.
- Two 3kW immersion heaters are included; one positioned lower in the tank to heat the non-solar dedicated volume of the cylinder for periods of low solar gain and an upper immersion heater to provide a one-hour boost.
- Control of the solar circuit is made by a factory-fitted pre-set differential temperature controller which monitors and regulates the system to give maximum solar benefit without the need for user interface.
- The solar hydraulic controls are factory-fitted for ease of installation.
- A variety of solar collector kits are available to suit different roof options.
- Models are available to suit both South facing and East / West facing properties.
- The central heating primary circuit is a wet sealed system suitable for radiators. Underfloor heating models are also available.
- The central heating heat source is a 9kW electric flow type boiler, factory-fitted.
- Temperature control of the central heating system is provided by a programmable room thermostat which can accommodate a wide range of off-peak electricity tariffs.
- No flue and no fuel tanks allow flexible installation.
- No requirement for an annual gas safety certificate.

* Standard Assessment Procedure.

Front control panel:

- Hot water – On / Off.
- One hour boost – On / Off.
- Central heating – On / Off.
- Electric boiler – Supply / Demand / Heat / Fault.
- Central heating – Pressure (Bar).
- Solar panel temperature – Min / Max / Actual (°C).
- Cylinder temperature – Min / Max / Actual (°C).
- Solar pump – On / Off.
- Solar system – Fault.
- Solar system – Pressure (Bar).

Key components

Electromax Solar installation

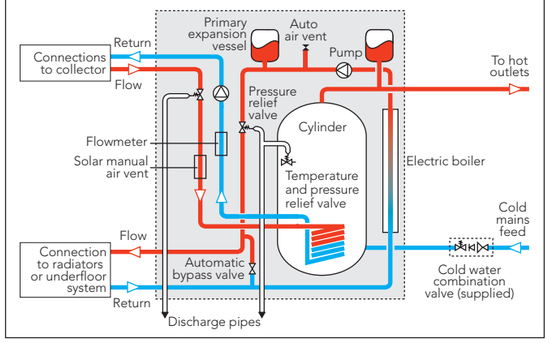

When combined with a suitable Electromax Solar collector panel kit the Electromax Solar comprises all the principle components to provide:

- An efficient solar, unvented, storage, water heating system.
- Back-up electric water heating.
- An electrically heated wet central heating system.

In the UK a well designed solar system has the potential to deliver up to 60% of a dwelling's hot water requirement from solar energy, however this energy is not received uniformly throughout the year (70% of the UK annual radiation is received over the period April to September and 25% is received in the months of June and July).

Solar unvented storage water heating system
The solar primary circuit includes a circulating pump, a flow meter, an expansion relief valve, a manual air vent and two high temperature check valves, all factory-fitted. Solar collectors, solar expansion vessels and heat transfer fluid are supplied as separate accessory kits.

Temperature control of the solar circuit is provided by a microprocessor-based differential temperature controller housed in the main Electromax Solar control panel. Over-temperature protection is provided by a manually-resettable double-pole cut-out.

The domestic hot water system includes a factory-fitted temperature and pressure relief valve and expansion vessel. A cold water combination valve which comprises a pressure reducing valve, and expansion relief valve, a check valve, and a strainer, is supplied loose.

The Duplex stainless steel cylinder gives maximum strength and long life, offering superior resistance to corrosion especially in aggressive water areas compared to copper, glass-lined steel and some lower grades of stainless steel.

Electrically heated wet central heating system
The Electromax Solar has a wet, sealed, central heating primary circuit suitable for connection to radiators or underfloor manifolds depending on the model purchased.

The circuit includes a 9kW electric flow boiler, circulating pump, an expansion vessel, an expansion relief valve, an automatic air vent and an automatic bypass valve, all factory-fitted.

1	Primary system expansion vessel.
2	Fascia panel.
3	User interface panel.
4	Solar temperature / pressure relief valve.
5	Boiler electronic control (under cover).
6	Solar flow meter including filling and drain.
7	Domestic hot water cylinder (insulated).
8	Solar manual air vent.
9	Temperature / pressure relief valve.
10	Boost immersion heater.
11	Primary system pressure relief valve.
12	Off-peak immersion heater.
13	Tundish.
14	Electric boiler.
15	Filling loop.
16	Solar flow.
17	Hot water outlet connection.
18	Solar return.
19	Discharge pipe.
20	Cold water inlet connection.
21	Primary flow isolating valve.
22	Primary return isolating valve.

For latest prices and delivery to your door visit MyTub Ltd - 0845 303 8383 - www.mytub.co.uk - info@mytub.co.uk

Full specifications

Specification

Capacities
Cylinder: 185, 220 and 250 litres.

Ratings
Boiler: 9kW @ 240V (8.3kW @ 230V).
Immersion Heaters: 2x 3kW @ 240V
(2x 2.8kW @ 230V).

Elements
Boiler: Long life, low watts density, copper elements in a copper heat exchanger.
Cylinder: Long life Superloy 825 alloy sheathed elements incorporated into an easily-removable heater plate should replacement be necessary.

Outer casing
White stove enamelled corrosion resistant steel.
Control Panel fascia – ABS white.
Cover – ABS tinted grey.

Thermal insulation
Boiler: Armaflex – closed cell insulation.
Dust, fibre and CFC/HCFC free (ODP Zero).
Cylinder: CFC/HCFC Free (ODP Zero) expanded polyurethane. GWP 3.1 (Global Warming Potential).
HT Armaflex on solar pipes.

Thermostat
Standard Boiler: Electronic dual control, user-adjustable from 65°C to 80°C.
Underfloor boiler: Electronic dual control, user-adjustable from 30°C to 60°C.
Cylinder: Element thermostat adjustable from 10°C to 70°C.

Water container
Boiler: Copper.
Cylinder: Duplex stainless steel with external expansion vessel.

Safety features
Boiler: 2 amp fused pump supply, dual control circuits, dual switching of the elements, self-checking circuitry and fault indication.
Resettable thermal cut-out.
Cylinder: Manually-resettable cut-out on heating element operates at 85°C.

Primary circuit
Pressure relief valve factory set to 3.5 bar.
Cylinder fitted with temperature and pressure relief valve, factory-set to operate at 10 bar / 90°C.

Approvals
CE marked.
Manufactured in the UK in a BS EN ISO 9001:2008, ISO 14001:2004 and BS OHSAS 18001:2007 registered factory.

Primary system pump
Grundfos UPS15-50 (with integral automatic air vent).

Solar system pump
Grundfos Solar UPS15-65.

Expansion vessels
Primary System: 12 litre 3 bar, factory-fitted.
Potable Water: 18 litre 3.5 bar, factory-fitted.
Solar: 24 litre, 1.5 bar, supplied loose.

Installation

The Electromax Solar must be installed by a competent installer in accordance with Local Building Regulations. Please contact your local building regulations officer for further advice.

Location
Must be floor-mounted. A fixing template is provided to assist. The location should consider access for service and maintenance and routes for discharge.

Water supply
Can be connected to a maximum flow rate of 55 litres per minute and a maximum supply pressure of 16 bar (reduced to 3.5). It is recommended that flow rates are no lower than 20 litres per minute and pressure is no lower than 1.5 bar.

Domestic hot water connections
Cold water inlet and hot water outlet connections are made by 22mm compression fitting at the bottom right hand side of the Electromax Solar. Pipe entry can be from the right hand side (via knock-out panels) or directly below.

Solar connections
Solar flow and solar return connections are made by 22mm compression fitting at the top left side of the Electromax Solar.

Central heating connections
Central heating flow and return connections are made by 22mm compression fitting at the bottom left hand side of the Electromax Solar. Pipe entry can be from the left hand side (via knock out panels) or directly below.

Discharge
Discharge pipework from the factory-fitted temperature and pressure relief valve should be installed in accordance with local building regulations. Discharge pipework is also required from the cold water combination valve. Discharge pipework is also required from the solar pressure reducing valve.

Electrical
Designed for connection to an off-peak electricity supply. Please contact your electricity supplier for details of available tariffs. The electric flow boiler must be permanently connected to the electricity supply via a double-pole isolating switch with a minimum breaking capacity of 45 amps. The control panel and immersion heaters must be permanently connected to the electricity supply via a double-pole isolating switch with a minimum breaking capacity of 13 amps.

External components
Solar collectors – a range of solar collector kits are available to suit different property types please see page 14 for further details.

Solar expansion vessel – the solar expansion vessel is wall-mounted (bracket and fixings supplied), it must be plumbed into the solar return pipework between the Electromax Solar and collector(s) and should be sited as close to the Electromax Solar as possible.

Solar diverter valve (East / West arrays only) – the Solar diverter valve is plumbed into the solar return pipework between the expansion vessel and collectors. Connection is made by 22mm compression fittings.

Cold water combination valve – the cold water combination valve is plumbed into the mains water supply before the Electromax Solar. Connection is made by 22mm compression fittings.

Programmable room thermostat – the programmable room thermostat is wall mounted and should be wired to the Electromax Solar.

Guarantee

The Electromax Solar Duplex stainless steel vessel carries a full 10 year guarantee against faulty manufacture or materials provided that:

- It has been correctly installed as per the instructions contained in the instruction manual and all relevant Codes of Practice and Regulations in force at the time of installation.
- It has not been modified in any way, other than by Heatrae Sadia Heating.
- It has not been frost damaged.
- It has only been used for the storage of potable water.
- It has not been tampered with or been subjected to misuse or neglect.
- It has been installed in the UK.
- Within 60 days of installation the user completes and returns the certificate supplied along with the proof of purchase to register the product.

All other components are guaranteed for a period of two years from the date of purchase provided that:

- It has been correctly installed as per the instructions contained in the instruction manual and all relevant Codes of Practice and Regulations in force at the time of installation.
- It has not been modified in any way, other than by Heatrae Sadia Heating.
- It has not been frost damaged.
- It has not been tampered with or been subjected to misuse or neglect.
- It has been installed in the UK.
- Within 60 days of installation the user completes and returns the certificate supplied along with the proof of purchase to register the product.

Evidence of purchase and date of supply must be submitted. These guarantees do not affect your statutory rights.

Dimensions and ordering

Dimensions

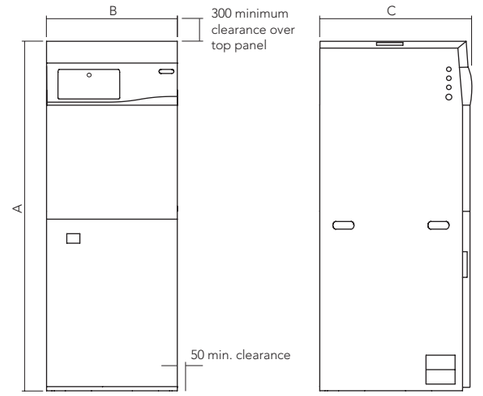

Capacity Radiator / Underfloor (litre)	A (mm)	B (mm)	C (mm)	Weight Empty (kg)	Weight Full (kg)
185	1580	550	600	94	279
220	1800	550	600	105.5	325.5
250	1990	550	600	112	362

Specification

Model	Rating @ 240V (kW) Boiler	Rating @ 240V (kW) Cylinder	Capacity (litre) Boiler	Capacity (litre) Cylinder
Radiator				
Electromax Solar 185	9	2x 3	1.3	185
Electromax Solar 220	9	2x 3	1.3	220
Electromax Solar 250	9	2x 3	1.3	250
Radiator – East West Array				
Electromax Solar 185	9	2x 3	1.3	185
Electromax Solar 220	9	2x 3	1.3	220
Electromax Solar 250	9	2x 3	1.3	250
Underfloor				
Electromax Solar 185	9	2x 3	1.3	185
Electromax Solar 220	9	2x 3	1.3	220
Electromax Solar 250	9	2x 3	1.3	250
Underfloor – East West Array				
Electromax Solar 185	9	2x 3	1.3	185
Electromax Solar 220	9	2x 3	1.3	220
Electromax Solar 250	9	2x 3	1.3	250

Cylinder performance

Capacity Radiator / Underfloor (litre)	Auxiliary volume (litre)	Heat-up auxiliary volume (mins)	Boost (mins)	Re-heat (mins)	Standing heat loss (kWhr/24hr)
185	120	126	60	88	1.76
220	145	152	60	106	1.73
250	175	178	60	125	1.70

Heat-up (auxiliary) – Time taken to heat auxiliary volume from 15°C to 60°C using lower 3kW immersion heater.

Boost – Time taken to heat boost volume (57 litres) from 15°C to 60°C using upper 3kW immersion heater.

Re-heat – Time taken to reheat auxiliary volume to 60°C using lower 3kW immersion heater following draw off of 70% auxiliary volume.

Heat-up (solar) – Solar heat up time will vary depending on solar radiation, sunshine hours, collector panel type, size and orientation.

Standing heat loss – Energy in kW/hr required to keep water at 65°C over 24 hour period (ambient temperature 20°C).

Ordering guide

Model	Product code
Electromax Solar 185 Radiator	95:022:212
Electromax Solar 220 Radiator	95:022:214
Electromax Solar 250 Radiator	95:022:215
Electromax Solar 185 Radiator East West Array	95:022:216
Electromax Solar 220 Radiator East West Array	95:022:217
Electromax Solar 250 Radiator East West Array	95:022:218
Electromax Solar 185 Underfloor	95:022:312
Electromax Solar 220 Underfloor	95:022:314
Electromax Solar 250 Underfloor	95:022:315
Electromax Solar 185 Underfloor East West Array	95:022:316
Electromax Solar 220 Underfloor East West Array	95:022:317
Electromax Solar 250 Underfloor East West Array	95:022:318

Legislation

Energy consumption of dwellings, in particular space and water heating have been identified as key areas to help meet European and UK government carbon reduction targets.

New regulations have been introduced (Code for Sustainable Homes (CfSH), and existing regulations tightened (Building Regulation Part L, Standard Assessment Procedure (SAP)) to ensure that both New Build properties and upgrades of existing dwellings meet the latest energy efficiency requirements, therefore driving down emissions and reducing the country's carbon footprint.

Installation of a solar water heater, whether as part of a new build development or as an upgrade to an existing property, plays a key part in increasing a property's energy efficiency and the Electromax Solar has been designed with CfSH, SAP and Part L in mind.

The Electromax Solar total cylinder capacity (Vt) is made of two parts: Dedicated solar volume (Vs) and auxiliary volume (Vb) where Vt=Vs+Vb.

The dedicated solar volume (Vs) can only be heated by solar energy. The volume has been calculated to ensure the requirements of Building Regulation Part L and SAP are met (Vs = 80% Vd where Vd = TFA or Vs = 25 Litres per metre squared of solar collector) if installed correctly.

The auxiliary volume has been calculated to ensure that on a cold day with low solar gain there will be sufficient hot water for the dwelling as required by BS 6700.

Electromax (Vt)	Vb	Vs	Vd	Total Floor Area Max	Collector Max
185	120	65	80	52	2.6
220	145	75	93	69	3.0
250	170	80	99	77	3.2

Note: To comply with SAP, the Electromax Solar must either be installed in a property with a total floor space equal to or lower than the value shown in the table above, or with a gross collector area equal to or lower than the value shown in the table opposite.

The table below shows recommended Electromax Solar and collector installations:*

Property Type	Occupants	Electromax	Panel
1 Bed Flat	1-2	185	1
2 Bed Flat / House	2-3	220	1
3 Bed House	3-4	250	2

*This table is for guidance only.
Our Specification Advice Hotline should be called to discuss design and requirements for specific sites – Tel: 01603 420220.

For latest prices and delivery to your door visit MyTub Ltd - 0845 303 8383 - www.mytub.co.uk - info@mytub.co.uk

Solar collectors

A complete range of high quality, Solar Keymark accredited panels to meet individual needs, tastes and requirements, to suit a range of different installations. On-roof, in-roof or flat roof solar collectors can efficiently harness natural energy from the sun.

- In-roof panels are suited to new build applications giving a higher standard of finish. On-roof panels are suited to existing properties as they are easier to install retrospectively.
- A number of mounting methods are available to suit a variety of roof types including Flat Tile, Profiled Tile, Slate and Flat Roof.
- South Facing arrays are suited to properties with a roof that faces between 30° West and 40° East of South.
- East / West arrays are available for properties with roofs that face over 30° West and 40° East of South.
- Only Heatrae Sadia Electromax Solar collector kits should be used with the Electromax Solar.
- The solar collector kits include all necessary components to install the solar collectors and complete the Electromax Solar installations including:
  - Collectors
  - Mounting rails and brackets
  - Flashing kit (In-roof panels only)
  - Solar fluid
  - Flexible tube
  - Expansion vessel
  - Thermostatic blending valve

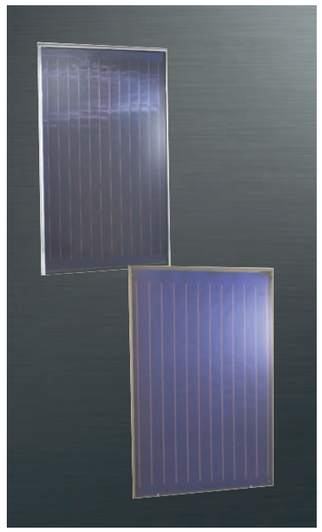

Solar collectors – On-roof / In-roof

On-roof collector

Ideal for those who wish to install solar thermal domestic hot water to a current building, without having to disturb too much of the existing roof structure.

- Flat plate aluminium frame collector provides complete weather protection.
- Ultrasonic welded (not soldered) so can withstand high temperatures.

Specification

Gross Area	2.02m²
Net Area	1.84m²
Weight	39kg
Absorber capacity	1.4 litres
Maximum Pressure	1.0 MPa (10 bar)
Absorption	95% ±2%
Emission	5% ±2%
Stagnation temperature	184°C (max)
Glass	Low-iron solar glass, tempered, 3.2mm thick.
Light transmittance	90.8% ±2%
Insulation	40mm Rockwool with black fleece. Heat conductivity 0.045 W/m²K Gross density 50-80 kg/m³

Slate and Tile System includes:

- 1, 2 or 3 panels, mounting brackets.

A Frame System includes:

- 1, 2 or 3 panels, A Frame.

In-roof collector

The perfect choice for all new build developments.

- Flat plate wooden frame collectors.
- Ultrasonic welded (not soldered) so can withstand high temperatures.

Specification

Gross Area	2.52m²
Net Area	2.32m²
Weight	54kg
Absorber capacity	1.7 litres
Maximum Pressure	1.0 MPa (10 bar)
Absorption	95% ±2%
Emission	5% ±2%
Stagnation temperature	210°C (max)
Glass	Low-iron solar glass, tempered, 3.2mm thick.
Light transmittance	90.8% ±2%
Insulation	50mm Rockwool with black fleece. Heat conductivity 0.045 W/m²K Gross density 50-80 kg/m³

Slate in-roof System includes:

- 1 or 2 panels, mounting brackets, flashing kit.

Tile in-roof System includes:

- 1 or 2 panels, mounting brackets, flashing kit.

Technical data

	Height (mm)	Width (mm)	Depth (mm)	Weight (kg)	Maximum pressure (bar)	Shutdown temperature (°C)
On-roof collector	1730	1170	83	35	10	234
In-roof collector	2058	1227	105	49	10	234

Performance

	Area (m²)	Zero loss co-efficient (W/m²K)	Heat loss co-efficient (W/m²K)
On-roof collector			
Aperture area	1.922	0.756	4.067
Absorber area	1.840	0.790	4.248
In-roof collector			
Aperture area	2.32	0.780	3.796
Absorber area	2.29	0.791	3.846

Ordering guide

Slate and Tile on-roof system	Product code
1 panel	95:970:517
2 panels	95:970:518
2 panels – East / West Array	95:970:519
3 panels – East / West Array	95:970:520
A Frame system	
1 panel	95:970:521
2 panels	95:970:522
Slate in-roof system	
1 panel	95:970:523
2 panels	95:970:524
2 panels – East / West Array	95:970:527
3 panels – East / West Array	95:970:528
Tile in-roof system	
1 panel	95:970:525
2 panels	95:970:526
2 panels – East / West Array	95:970:529
3 panels – East / West Array	95:970:530

Accessories ordering guide

Fittings	
Multifit Solar 6x 22mm high temperature pipe compression – male	51:227:62
Multifit Solar 6x 22mm high temperature pipe compression – female	51:227:63
Multifit Solar 6x 22mm high temperature pipe compression – tee	51:227:64
Multifit Solar 30m flexible stainless steel pipe kit	51:222:38
Solar fluid	
Multifit Solar fluid type LS 20 Ltr (Pink)	51:302:25
Multifit Solar fluid type L 20 Ltr (Blue)	51:195:49
Multifit Solar electric fluid filling pump	51:302:34
Multifit Solar electric hand filling pump	51:227:61
Miscellaneous	
Multifit Solar 13m solar sensor wire	51:222:37
Multifit Solar refractometer antifreeze test kit	51:195:59
Roof tile	95:970:540
Solar sensor wire junction box	95:970:539

For latest prices and delivery to your door visit MyTub Ltd - 0845 303 8383 - www.mytub.co.uk - info@mytub.co.uk

Contact

Specification Advice Hotline
T: 01603 420220 F: 01603 420229
E: specifier@heatraesadia.com

After Sales Service
T: 0844 871 1535 F: 0844 871 1528
E: heatraesadiaservice@heateam.co.uk

Web www.heatraesadia.com

heateam

heateam is Heatrae Sadia's very own service division. With us on your side, you can be sure that your customers are in the very best hands. Totally committed to quality and safety, heateam is open 7 days a week, for 363 days a year, and offers:

- **Dedicated Trade Advice Line** – our helpful and qualified specialists are always on hand to help you with even the most complex technical query.
- **Installer Priority Call-Outs** – our 280 strong team of specifically trained expert heating engineers covers the UK, no one is better qualified to look after Heatrae Sadia's products for the duration of the guarantee.
- **Fully Stocked Vans** – a nationwide fleet of vans, fully stocked with spare parts – meaning we can repair our appliances on the first visit in 95% of call-outs.
- **Exclusive Service Plans** – heateam also offer Heatrae Sadia's customers a range of exclusive annual service plans.

Opening Times: Monday-Friday 8am-6pm, weekends and Bank Holidays* 8.30am-2pm.
*excluding Christmas Day and New Year's Day.

Simply call **0844 8711535** or visit our website at **www.heateam.co.uk**

Heatrae Sadia Heating Hurricane Way Norwich Norfolk NR6 6EA

Heatrae Sadia Heating may introduce modifications to their products from time to time. Consequently, the details given in this brochure are subject to alteration without notice.

95 900 825 Issue 8 © Heatrae Sadia Heating 2011

PART OF BDR THERMEA

Brochures for all of our products are available free of charge. Please call our literature hotline on 01603 420127.

MEGAFLO ECO

Megaflo eco cylinder range

DOMESTIC HEATING AND HOT WATER

Aerheat
Amptec
Electric Solar
Electromax
Electromax Solar
Immersion Heaters
Megalife HE
Megalife Solar
Multipoint Instantaneous
Showers

COMMERCIAL HOT WATER

B3M / C3M
Express
FBM
Handy
Handy Dri / Hair Drier
Hotflo
Multipoint
Multipoint SS
Streamline
UTC 99

DRINKING WATER

SuperChill
Supreme

PN 95 900 825 BJN 308360

For latest prices and delivery to your door visit MyTub Ltd - 0845 303 8383 - www.mytub.co.uk - info@mytub.co.uk