TOILET PAPER DISPENSER MEDICLINICS ®

Surface mounted, two standard rolls stainless steel AISI 304 bright finish

Código: PR0784C

General description

· Toilet paper dispenser for two standard rolls, surface mounted, stainless steel AISI 304 bright finish.
· Manual dispensing.
· Suitable for high traffic facilities.
· Model suitable for public use.
· It generally goes along with a toilet brush holder and toilet paper waste receptacle, stainless steel AISI 304 bright finish.

Components and Materials

· Stainless steel AISI 304 bright finish one-piece body, 0,8 mm thick, fully sealed. The supports of the screws in the back of the appliance, are acting as an anti-moisture support, as well as slots to avoid the screws damaging the toilet paper. It is mounted on the wall by means of 3 wood screws with their corresponding 5 mm wall plugs. It includes a lock system with standard mediclinics ® key, that allows opening the lid for replenishment.
· Stainless steel AISI 304 bright finish one-piece seamless lid, 0,8 mm thick, fully sealed. Fixed to the body by means of 2 rivets that allows swinging of the lid for the replenishment through the top opening. The extra tissue rolls descend when the previous one has been finished, by a simple hand manipulation through the side window. There is no need to open the lid for the removal of consumed rolls.
· Frontal sight-hole and slots on each side of body indicate refill time.

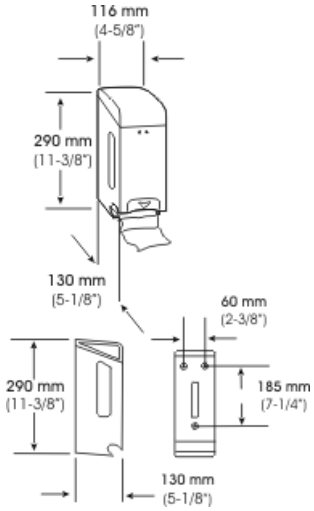

Dim.: ±4%

Technical Specifications

Toilet paper roll capacity - 2 u
Dimensions - 290x 116x 130 mm
Weight (empty dispenser) - 0,9 Kg
Toilet paper roll diameter - Ø 105-125 mm (maximum)
Toilet paper roll width - 110 mm (maximum)
Recommended installation height to the bottom - 65-75 cm

Operation

Pull visible toilet paper, at your own convenience.

Certificates & Qualifications

ISO 9001:2008.

Mediclinics, S.A., reserves the right to make changes and/or modifications to the products and their specifications without prior notice.

mediclinics S.A