V5433A

3-WAY ROTARY VALVE PN6

PRODUCT DATA

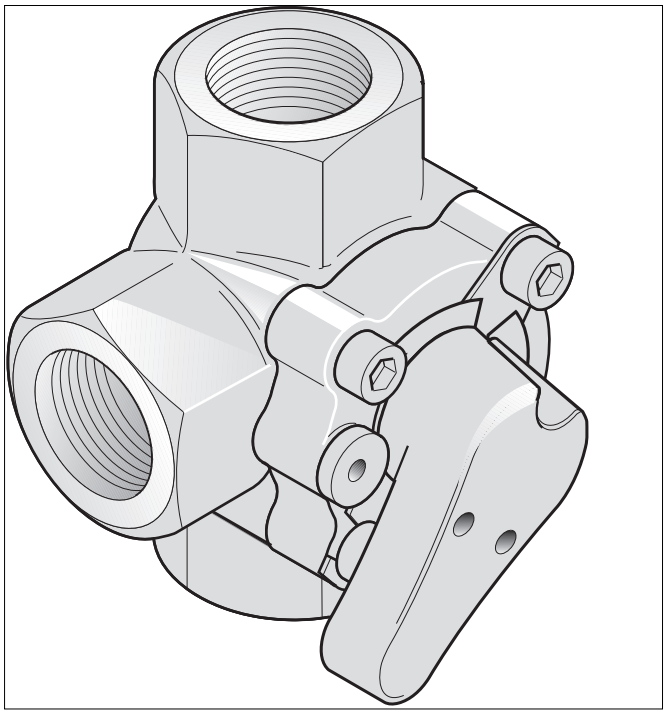

APPLICATION

The V5433A 3-way rotary valve was designed especially for accurate control of supply water temperature in heating and air conditioning systems. When used in combination with the M6063 actuator, its sturdy construction ensures a long and reliable operating life.

FEATURES

- **Chrome-plated plug for long life span**
- **Optimized characteristics for supply water temperature control**
- **Reliable mounting for electrical actuators**
- **Wide range of flow rates**
- **Compact design**

SPECIFICATIONS

Nominal static pressure	600 kPa (6 bar)
Maximum pressure drop	dependent on type (see "Specification and Order Number per DN" on page 3)
Leakage rate	< 1% of k_{VS}
Ports	Internal threads
Angle of rotation	90°
Packing	Double O-ring sealing
Material body	Cast iron
Material inner parts	Chrome-plated cast iron
Medium	Heating water according to VDI 2035 (oxygen concentration < 0.2 g/m^3, pH 8...9.5)
Water temperatures in the valve	2 to 110 °C, non-condensing
Weight	dependent on type (see "Dimensions" on page 3)
Flow characteristic	equal percentage

® U.S. Registered Trademark

Copyright © 2008 Honeywell Inc. • All rights reserved

For latest prices and delivery to your door visit MyTub Ltd - 0845 303 8383 - www.mytub.co.uk - info@mytub.co.uk

OPERATION

The valve controls a mixing water temperature with a rotating plug. The plug adjusts the water flow of two inputs with two control curves. The required flow water temperature is reached by adding a proportion of return water to the boiler hot water. The V5433A features special control characteristics for optimum control performance.

SUITABLE ACTUATORS

M6063L1009 (230/240 Vac; floating)

M6063L4003 (230/240 Vac; floating) auxiliary switch

M6063A1003 (24 Vac; floating)

M6063A4007 (24 Vac; floating) auxiliary switch

MOUNTING DETAILS

Mounting Version 1 **Examples** **Mounting Version 2** **Examples**

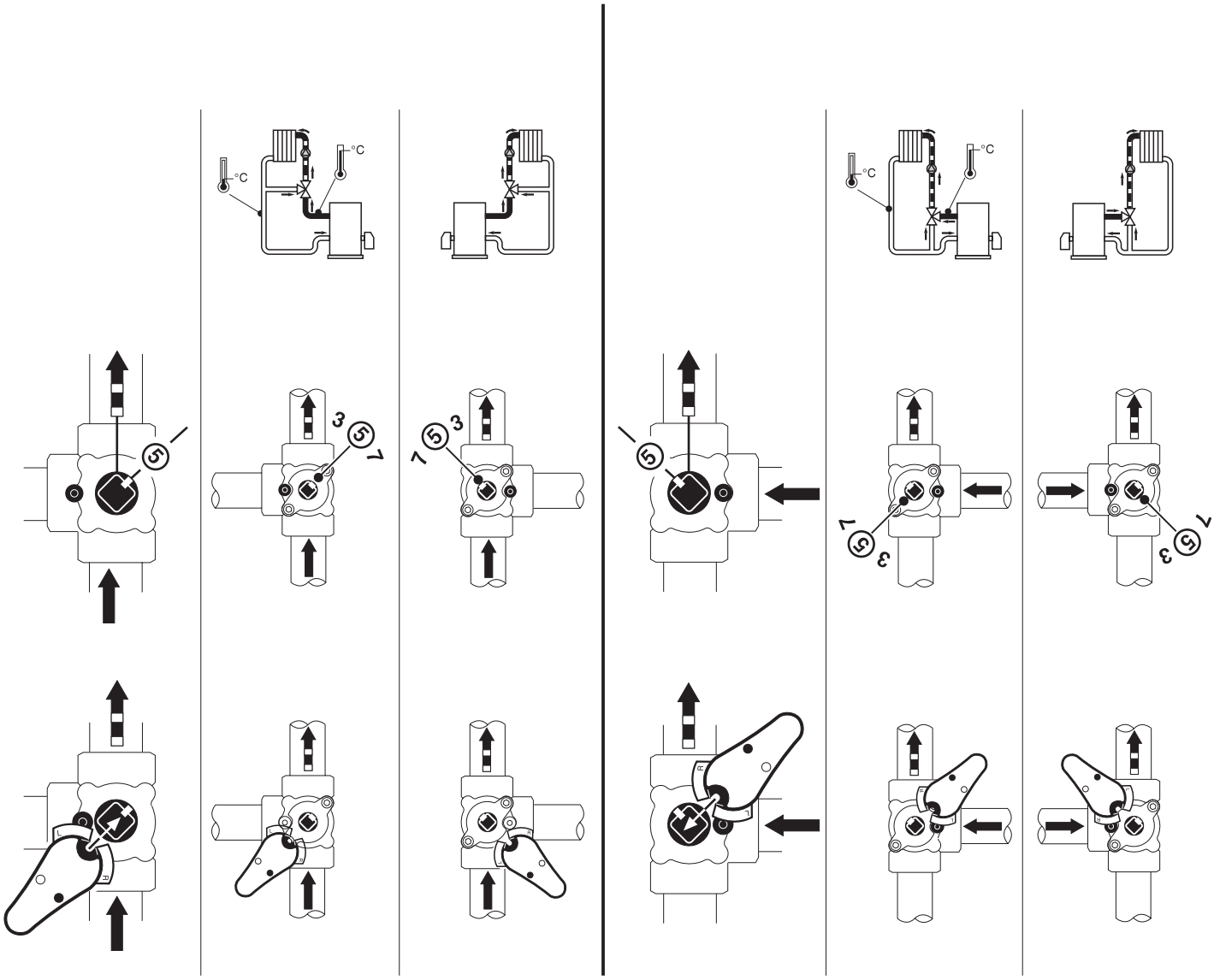

SPECIFICATION AND ORDER NUMBER PER DN

DN	OS Number Internal Thread	kvs [m³/h]	Δp [kPa]
20	V5433A 1015	2.5	100
20	V5433A 1023	4.0	100
20	V5433A 1031	6.3	100
25	V5433A 1049	10	100
32	V5433A 1056	16	100
40	V5433A 1064	25	100
50	V5433A 1072	40	100

DIMENSIONS

Type	DN	a [mm]	c [mm]	SW [mm]	h [mm]	i [inch]	Net weight [kg]
V5433A 1015	20	85	340	41	42.5	R 3/4	0.9
V5433A 1023	20	85	340	41	42.5	R 3/4	0.9
V5433A 1031	20	85	340	41	42.5	R 3/4	0.9
V5433A 1049	25	105	345	46	52.5	R 1	1.4
V5433A 1056	32	105	350	55	52.5	R 5/4	1.9
V5433A 1064	40	115	355	65	57.5	R 1 1/2	3.3
V5433A 1072	50	120	365	80	60.0	R 2	6.1

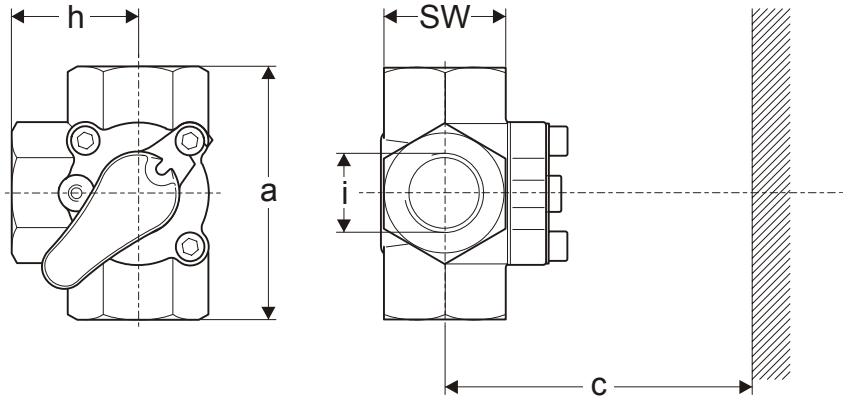

Fig. 1. V5433A dimensions

For latest prices and delivery to your door visit MyTub Ltd - 0845 303 8383 - www.mytub.co.uk - info@mytub.co.uk

O-RING REPLACEMENT

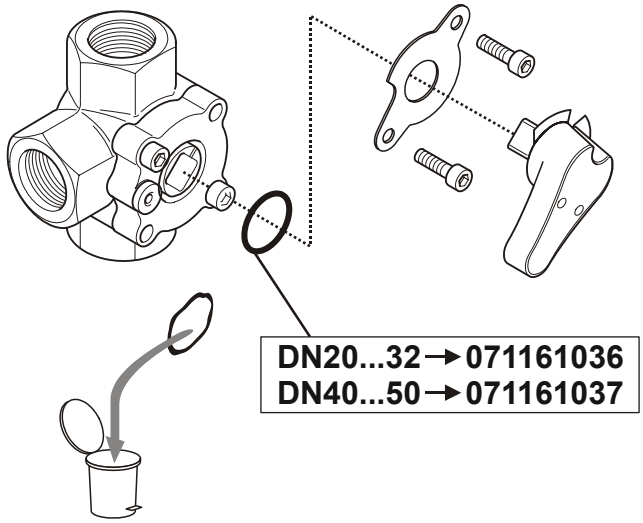

Honeywell

Manufactured for and on behalf of the Environmental and Combustion Controls Division of Honeywell Technologies Sàrl, Ecublens, Route du Bois 37, Switzerland by its Authorized Representative:

Automation and Control Solutions
Honeywell GmbH
Böblinger Strasse 17
71101 Schönaich
Germany
Phone: (49) 7031 63701
Fax: (49) 7031 637493
http://ecc.emea.honeywell.com
Subject to change without notice. Printed in Germany

EN0B-0079GE51 R0808

For latest prices and delivery to your door visit MyTub Ltd - 0845 303 8383 - www.mytub.co.uk - info@mytub.co.uk