# Oil Pump Type RSA
# Sizes 28, 40, 60, 95, 125

## General Data Sheet
For specific information on this product, please contact Danfoss Burner Components

### Identification

**RSA 60** *(Example)*

- **28** Capacity 46 l/h
- **40** Capacity 75 l/h
- **60** Capacity 120 l/h
- **95** Capacity 184 l/h
- **125** Capacity 255 l/h

**Note!**
Shaft rotation, location of pressure outlet and other connections are seen from shaft end.

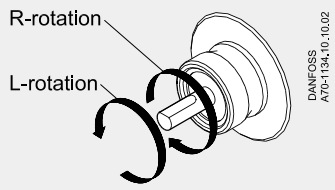


### Connections
Example shows L-rotation pump.
On R-rotating pumps location of connections are identical.

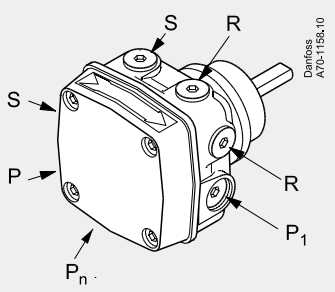


**$P_1$** Pressure adjustment
**S** Suction inlet G 1/4
**R** Return outlet G 1/4
**P** Pressure outlet G 1/8
**$P_n$** Pressure gauge port G 1/8
**H** Filter

RSA oil pumps are designed for small/ medium sized domestic and commercial oil burners up to 255 l/h. The pumps have a built-in pressure regulator with shut-off function. A special regulation spring is available for feed/transfer applications.

### Application and Features
- Light oil and Kerosene
- 1 or 2-pipe operation
- 1-stage
- Built-in pressure regulator with shut-off
- Ring filter
- Spec. spring available for feed/transfer applications

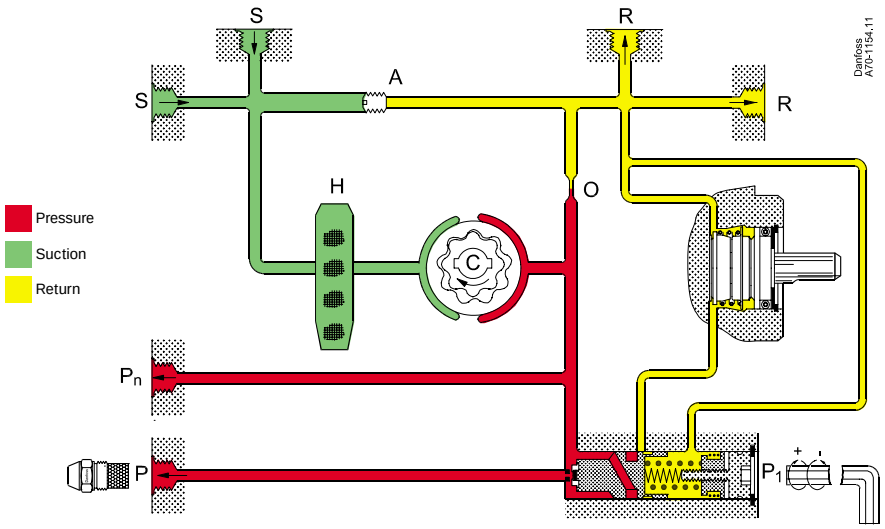


## Function

From the suction inlet (S) oil is drawn through the gear set, where the pressure is increased. By means of the piston and the spring in the pressure regulator the pressure is kept constant at the value set on adjustment screw ($P_1$).

In 2-pipe systems the excess oil is led back to the return outlet (R). In 1-pipe systems with plugged return outlet (R) and removed by-pass screw (A), the oil is returned internally to the gear set (see details in below figure).
When the pump is stopped the pressure drops and the spring force in the pressure regulator will move the piston until it seats and the oil flow is shut off effectively.

### Changeover between 1 and 2-pipe operation. Filter change

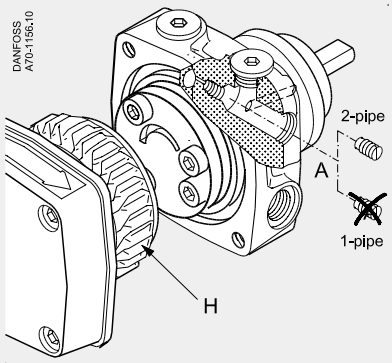


2-pipe:
Screw (A) fitted

1-pipe:
Screw (A) removed

### Bleeding
In 2-pipe systems the pumps are self-priming, i.e. bleeding is performed via the constriction (O) to the return outlet (R).
In 1-pipe systems with plugged return outlet (R) and by-pass screw (A) removed, bleeding must be performed through the pressure gauge port ($P_n$).
In 1-pipe systems with underlying tank, the closing function of the regulating valve must be rendered inoperative. This is made by connecting the nozzle line to the pressure gauge port ($P_n$) and plug the pressure port (P). In this application a cut-off valve must be installed in the nozzle line.



For latest prices and delivery to your door visit MyTub Ltd - 0845 303 8383 - www.mytub.co.uk - info@mytub.co.uk

## Technical Data

| RSA | Size | 28 | 40 | 60 | 95 | 125 |
|---|---|---|---|---|---|---|
| Viscosity range (measured in suction inlet) | cSt. ($mm^2/s$) | 1.3 - 75 | | | | |
| Filter area/mesh | $cm^2/\mu m$ | 75/150 | | | 170/150 | |
| Pressure range [1] | bar | 5.5-15 | 5.5-21 | | | |
| Factory setting | bar | 7 ±1 | | | 10 ±1 | |
| Max. pressure in suction inlet/return outlet | bar | 4 | | | | |
| Speed | $min^{-1}$ | 2400-3450 | 1400-3450 | | | |
| Max. starting torque | Nm | 0.20 | 0.22 | 0.24 | 0.30 | 0.35 |
| Ambient temperature | °C | –20 to +70 | | | | |
| Storage temperature | °C | –25 to +70 | | | | |
| Temperature of medium | °C | –10 to +70 | | | | |
| Neck/Flange | | EN 225 | | | | |

[1] Max. 12 bar at 1.3-1.8 cSt.

### Nozzle capacity

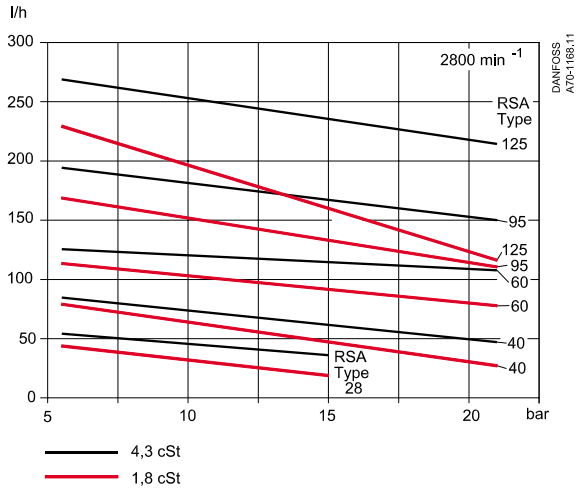


### Operating torque

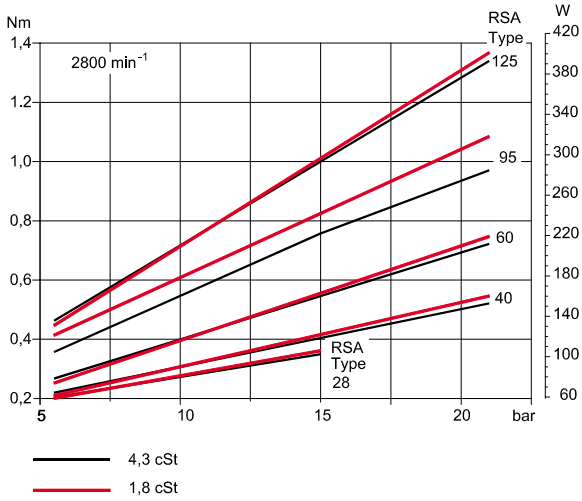


### Power consumption

## Dimensions

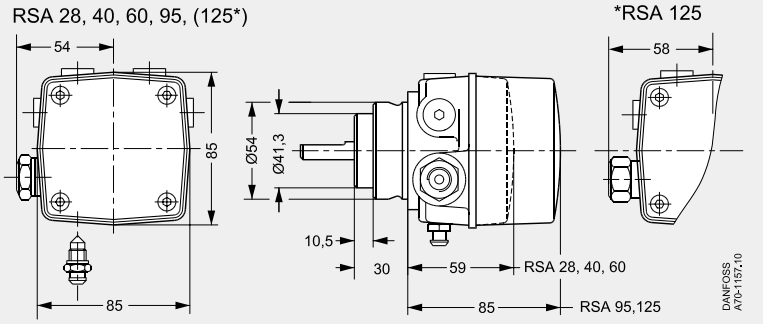


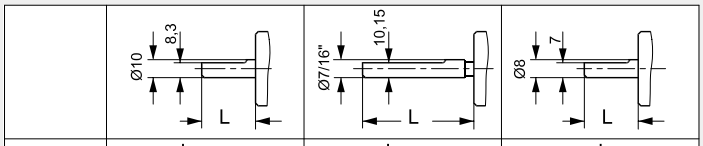


| TYPE | L | L | L |
|---|---|---|---|
| RSA 28 | 30,0 | 62,0 | 11,4 |
| RSA 40 | 28,8 | 60,8 | 10,2 |
| RSA 60 | 26,8 | 58,8 | - |
| RSA 95 | 30,0 | - | - |
| RSA 125 | - | 62,0 | - |

Danfoss can accept no responsibility for possible errors in catalogues, brochures and other printed material. Danfoss reserves the right to alter its products without notice. This also applies to products already on order provided that such alterations can be made without subsequential changes being necessary in specifications already agreed.
All trademarks in this material are property of the respective companies. Danfoss and the Danfoss logotype are trademarks of Danfoss A/S. All rights reserved.



For latest prices and delivery to your door visit MyTub Ltd - 0845 303 8383 - www.mytub.co.uk - info@mytub.co.uk