## Cast Iron Gate Valve

Crane cast iron gate valves offer the ultimate in dependable service wherever minimum pressure drop is important
Complete with Bronze trim
Each valve is hydrostatically tested to BSEN12266-1 (formerly BS5150)
Manufactured in accordance with BSEN1171 (formerly BS5150)

### Materials

| Part | Material | Sizes |
|---|---|---|
| Body | Cast Iron BSEN1561 GJL-250 | All |
| Bonnet | Cast Iron BSEN1561 GJL-250 | All |
| Bonnet Gasket | Asbestos Free | All |
| Bonnet Bolts/Nuts | Steel BS4190 Gr.4.6/4.0 | All |
| Disc | Cast Iron BSEN1561 GJL-250 | All |
| Stem | Brass BS2874 CZ114 | All |
| Stuffing Box | Cast Iron BSEN1561 GJL-250 | All |
| Gland | Cast Iron BSEN1561 GJL-250 | All |
| Gland Bolts | Steel BS4190 Gr.4.6 | Sizes 200 - 300 |
| Gland Studs | Steel BS4439 Gr.4.8 | Sizes 50 - 150 |
| Stuffing Box Gasket | Asbestos Free | All |
| Packing | Asbestos Free | All |
| Handwheel | Malleable Iron BS EN 1562 GJMB-300-6 | All |
| Washer | Steel | All |
| Body Seat Ring | Bronze BSEN1982 CC491K | All |
| Disc Stem Nut | Bronze BSEN1982 CC491K | All |
| Disc Ring | Bronze BSEN1982 CC491K | All |
| Handwheel Nut | Steel BS4190 Gr.4 | All |

### Dimensional Drawing

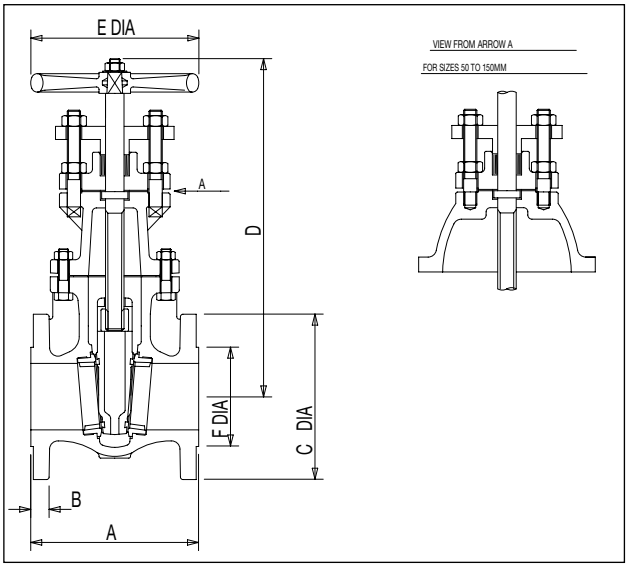


### Dimensions and Weights

| Size | Weight (kg) | A (mm) | B (mm) | C (mm) | D (mm) | E (mm) | F (mm) |
|---|---|---|---|---|---|---|---|
| 50mm | 14 | 178 | 20 | 165 | 277 | 140 | 102 |
| 65mm | 17 | 190 | 20 | 185 | 296 | 140 | 122 |
| 80mm | 22 | 203 | 22 | 200 | 337 | 152 | 138 |
| 100mm | 30 | 229 | 24 | 220 | 369 | 203 | 158 |
| 125mm | 41 | 254 | 26 | 250 | 429 | 229 | 188 |
| 150mm | 47 | 267 | 26 | 285 | 470 | 229 | 212 |
| 200mm | 85 | 292 | 26 | 340 | 600 | 305 | 268 |
| 250mm | 146 | 330 | 28 | 395 | 722 | 356 | 320 |
| 300mm | 188 | 356 | 28 | 445 | 818 | 406 | 370 |

**Pressure Rating:** PN10
**UK End Connection:** Flanged BSEN1092-2
**Operator:** Handwheel
Gate valves are best for services that require infrequent valve operation, and where the disk is kept either fully opened or fully closed. They are not practical for throttling.
**Specification:**
Long face to face, Wedge Disk, Non-rising stem.
Valves are manufactured in accordance with BSEN1171 (formerly BS5150). End flanges conform to BSEN1092-2 section 3.2 table 10 with raised face and are normally supplied drilled.
This valve is not suitable for use on group 1 gasses or unstable fluids, as defined by the Pressure Equipment Directive 97/23/EC.
Temperature operating range: - 10 to 180ºC.
**Available Options:**
Flanges undrilled, P50 locking device.



For latest prices and delivery to your door visit MyTub Ltd - 0845 303 8383 - www.mytub.co.uk - info@mytub.co.uk