INSTALLATION & USER INSTRUCTIONS

INTELLIGENT ROOM THERMOSTAT

FR 10

FOR USE WITH THE FOLLOWING APPLIANCES:
GREENSTAR CDI COMBINATION BOILERS
GREENSTAR CDI SYSTEM BOILERS FITTED WITH OPTIONAL INTEGRAL DIVERTER VALVE
GREENSTAR HIGHFLOW CDI COMBINATION BOILERS

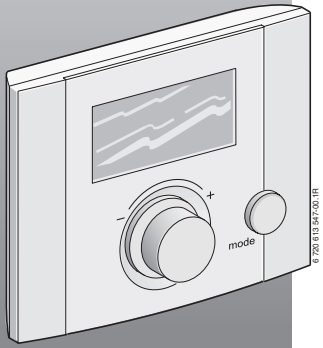

WORCESTER
Bosch Group

6 720 617 760 (2008/09)

very to your door visit MyTub Ltd - www.mytub.co.uk - info@mytub.

Dear customer,

Congratulations on having decided in favour of a top-quality product from our company.

The FR 10 offers everything you can expect from a modern heating control: It is both reliable and energy saving.

Like all Bosch Group products, the FR 10 has been produced and tested according to the most stringent quality standards so that you can enjoy the Worcester warmth for a long time to come.

Contents

1 Symbols and safety precautions 4
1.1 Symbols 4
1.2 Safety precautions 5

2 Technical data for the accessory item 6
2.1 Standard package 7
2.2 Technical data 7
2.3 Supplementary accessories 8
2.4 Cleaning 8

3 Installation (for installers only) 9
3.1 Installation 9
3.2 Disposal 13
3.3 Electrical connections 13

4 Commissioning (for installers only) 14

5 Operation 15
5.1 Changing the operating mode 17
5.2 Changing the required room temperature 17
5.3 Changing the standard setting of the required room temperature 18
5.4 Adjusting the installer level (for installers only) . . . 19
5.5 Selecting the heating program 23
5.6 Frost protection 23

6 Troubleshooting 24

7 Tips on saving energy 27

8 Environmental protection 28

very to your door visit MyTub Ltd - www.mytub.co.uk - info@mytub.

1 Symbols and safety precautions

1.1 Symbols

Safety instructions in this document are identified by a warning triangle and are printed on a grey background.

Signal words indicate the seriousness of the hazard in terms of the consequences of not following the safety instructions.

- **Caution** indicates that minor damage to property could result.
- **Warning** indicates that minor personal injury or serious material losses could result.
- **Danger** indicates that serious personal injury could result. In particularly serious cases, lives could be at risk.

Notes are identified by the symbol shown on the left. They are bordered by horizontal lines above and below the text.

Notes contain important information in cases where there is no risk of personal injury or material losses.

very to your door visit MyTub Ltd - www.mytub.co.uk - info@mytub.

1.2 Safety precautions

- These instructions must be observed to ensure correct operation.
- Install and commission the boiler and all accessories in accordance with the associated instructions.
- Allow only qualified installers to install accessories.
- Only use these accessories in conjunction with the heating appliances listed. Follow the connection diagram!
- Do not connect this accessory to the 230 V mains electricity supply.
- Before installing these accessories:
  Isolate the voltage supply (230 V AC) to the heating appliance and all additional devices on the bus.
- Do not install this accessory in damp areas.
- Inform customers about the functions of accessories and instruct them in their operation.
- When there is a risk of frost, leave the boiler switched on and observe the frost protection information.

very to your door visit MyTub Ltd - www.mytub.co.uk - info@mytub.

2 Technical data for the accessory item

The FR 10 can only be connected to a boiler with BUS-enabled Heatronic 3.

- The FR 10 enables the room temperature control of a single heating system.
- The FR 10 must only be used in conjunction with a suitable time switch, MT 10 or DT 20.
- In systems with a single heating system, you can change automatically between the currently set operating mode ☼ / ☾ / ❄ or heating operation off 🔒 using the time program of a time switch.
- The controller is designed for wall mounting.

very to your door visit MyTub Ltd - www.mytub.co.uk - info@mytub.

2.1 Standard package

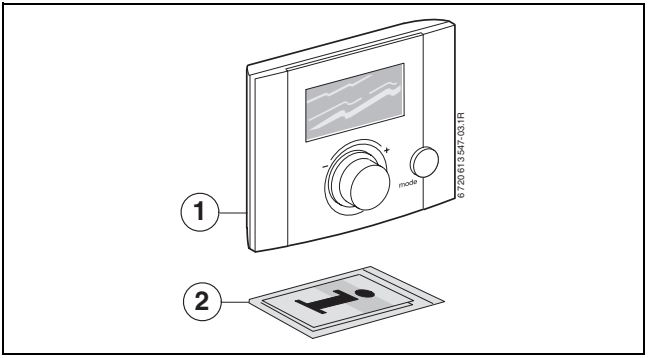

Fig. 1

1 Top section, controller and base for wall mounting

2 Installation and operating instructions

2.2 Technical data

Dimensions	85 mm × 100 mm × 35 mm H × W × D
Rated voltage	10 ... 24 V DC
Rated current	≤ 3.5 mA
Controller output	2-wire BUS
Control range	5 ... 30 °C in steps of 0.5 K
permiss. ambient temp.	0 ... +50 °C
Class of protection	III
Protection level	IP20
	CE

Tab. 1

very to your door visit MyTub Ltd - www.mytub.co.uk - info@mytub.

2.3 Supplementary accessories

- **MT 10**: Mechanical single channel time switch.
- **DT 20**: Twin channel digital programmer.

2.4 Cleaning

▶ If required, use a damp cloth to wipe the controller casing. Never use aggressive or acidic cleaning agents for this.

very to your door visit MyTub Ltd - www.mytub.co.uk - info@mytub.

3 Installation (for installers only)

DANGER: Risk of electric shock

- Before installing these accessories:
  Isolate the voltage supply (230 V AC) to the heating appliance and all additional devices on the bus.

3.1 Installation

The installation location must be suitable for controlling the heating system or heating circuit.

The accuracy of the FR 10 is dependent upon the installation location.

Any radiator in the same room as the FR 10 should not have a thermostatic radiator valve fitted.

The FR 10 should be installed so that the overall temperature of the property is monitored, for example, hallways or landings and not be installed in a living room or room with supplementary heating.

very to your door visit MyTub Ltd - www.mytub.co.uk - info@mytub.

- Select the installation location.

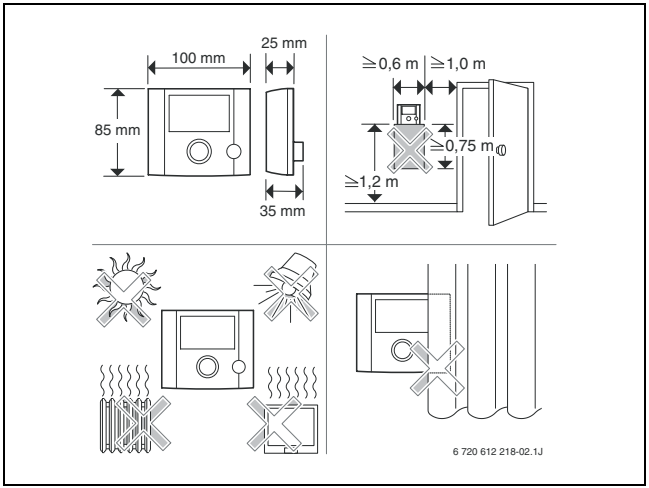

Fig. 2

very to your door visit MyTub Ltd - www.mytub.co.uk - info@mytub.

- Remove the top section from the base.

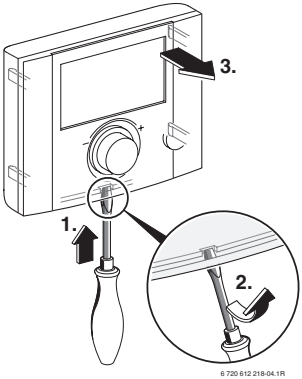

Fig. 3

The mounting surface on the wall should be level.

very to your door visit MyTub Ltd - www.mytub.co.uk - info@mytub.

- Fit the base.

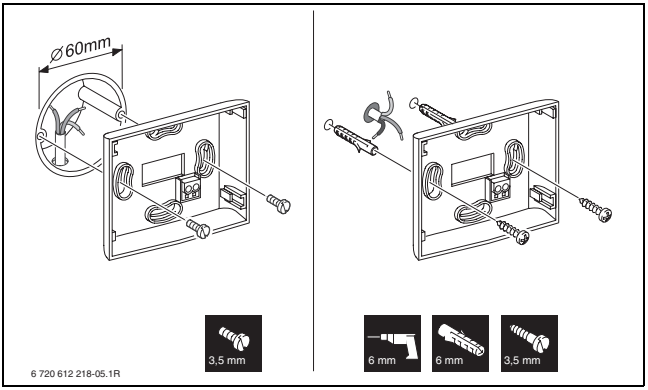

Fig. 4

- Connect to the power supply.

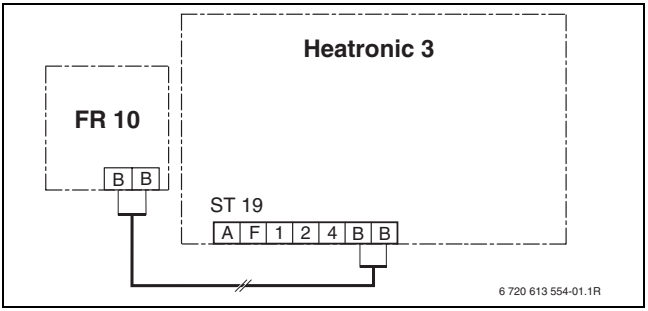

Fig. 5

- Push on top section.

very to your door visit MyTub Ltd - www.mytub.co.uk - info@mytub.

3.2 Disposal

- Dispose of packaging in an environmentally responsible manner.
- When replacing components, dispose of the old parts in an environmentally responsible manner.

3.3 Electrical connections

- BUS connection from the controller to other BUS subscribers: Use electrical cable with the minimum specification H05 VV-... (NYM-I...).

Permissible cable lengths from the BUS-enabled Heatronic 3 to the controller:

Cable length	Cross-section
≤ 80 m	0.40 mm^2
≤ 100 m	0.50 mm^2
≤ 150 m	0.75 mm^2
≤ 200 m	1.00 mm^2
≤ 300 m	1.50 mm^2

Tab. 2

- To avoid inductive interference, lay all bus cables seperately to lines of 230 V or 400 V (minimum spacing 100 mm).
- In case of external inductive interference, shield the cables. This ensures that the cables are shielded from external interference (e.g. heavy current cables, overhead wires, transformer stations, radio and television set, amateur radio stations, microwave ovens etc).

very to your door visit MyTub Ltd - www.mytub.co.uk - info@mytub.

4 Commissioning (for installers only)

1 Switch on the system.

2 During first commissioning or after a global reset (resetting all adjustments):

▶ Confirm the flashing code **1 HC** by pressing ⁻◯⁺.

3 System configuration starts automatically, and lasts approximately. 60 seconds during which time **AC** will be displayed.

very to your door visit MyTub Ltd - www.mytub.co.uk - info@mytub.

5 Operation

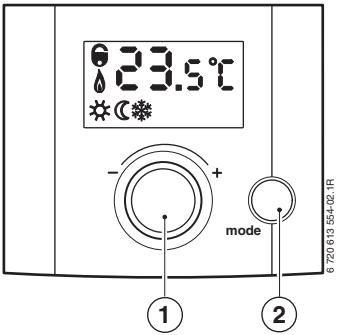

Fig. 6

very to your door visit MyTub Ltd - www.mytub.co.uk - info@mytub.

Controls	
1	Rotary selector ⊖◯⊕ : - Turn = Adjust value - Press = Confirm setting/value
2	**Mode** key: - Change operating mode - Accessing user level = hold down for approx. 3 seconds - Accessing installer level = Hold down for approx. 6 seconds - Return to the higher level
Symbols	
23.5°C	Current room temperature or required room temperature (if the rotary selector is turned)
☼	Operating mode **Comfort** (factory setting is 21 °C)
☾	Operating mode **Economy** (factory setting is 15 °C)
❄	Operating mode **Frost** (factory setting is 5 °C)
	No heating operation available, e.g. heating mode off due to time switch (accessory) or boiler
	Burner operation

Tab. 3

Set the central heating temperature controller on the boiler to maximum, to allow the FR 10 to be effective.

The FR 10 can only regulate the heating system if an operating mode is enabled. In conjunction with a time switch (accessory), the time program automatically changes between the currently selected operating mode ☼ / ☾ / ❄ and heating operation off . Frost protection is safeguarded (→ Chapter 5.6, page 23).

very to your door visit MyTub Ltd - www.mytub.co.uk - info@mytub.

5.1 Changing the operating mode

- Briefly press **mode** until the required operating mode is displayed.
  ☼ = constant **Comfort**
  ☾ = constant **Economy**
  ❄ = constant **Frost**
  The selected operating mode is only enabled if the heating operation 🔒 is not blocked.

5.2 Changing the required room temperature

Use this function if you want to change the required room temperature by way of an exception, e.g. for the duration of a party.

- With rotary selector ⊖◯⊕ adjust the **required room temperature** for the current operating mode ☼ / ☾ / ❄.
  During this period, the required room temperature will flash instead of the display showing the current room temperature. The change to the required room temperature will remain in force until the next operating mode change or until the power is interrupted. At that point the system reverts to the room temperature programmed at the user level for that particular operating mode.

very to your door visit MyTub Ltd - www.mytub.co.uk - info@mytub.

5.3 Changing the standard setting of the required room temperature

Use this function if you want to permanently change the required room temperature away from the standard setting.

- Accessing user level: Hold down **mode** for approx. 3 seconds until **– –** is displayed.
- Release the **mode** key and turn until the required parameter is shown:
  - **1A p** = Required room temperature for ☼ **Comfort**
  - **1b p** = Required room temperature for ☾ **Economy**
  - **1C p** = Required room temperature for ❄ **Frost**
- Briefly press : The current temperature for the previously selected parameter will be displayed.
- Briefly press : The current temperature flashes.
- Turn to adjust the required room temperature:
  - ☼ **Comfort** = maximum required temperature (e.g. when the living space is occupied and occupants require a comfortable room temperature). Setting range higher than ☾ **Economy** up to 30 °C.
  - ☾ **Economy** = average required temperature (e.g. if a low room temperature is adequate or if everyone is away or asleep and the house should not cool down excessively). Setting range higher than ❄ **Frost** and lower than ☼ **Comfort**.
  - ❄ **Frost** = minimum required temperature (e.g. if everyone is away or asleep and the house should not cool down excessively). Consider any pets and plants. Setting range lower than ☾ **Economy** down to 5 °C.

very to your door visit MyTub Ltd - www.mytub.co.uk - info@mytub.

- Briefly press ⁻◯⁺ to save the value.
- Press **mode** until the current room temperature is displayed.

5.4 Adjusting the installer level (for installers only)

The installer level is exclusively designed for installers.

- Accessing installer level: Hold down **mode** for approx. 6 seconds until **– – –** is displayed.
- Release the **mode** key and turn ⁻◯⁺ until the required parameter is shown:
  - **5A p** = Code
  - **5b p** = Heating circuit configuration
  - **6A p** = Adjust the integral room temperature sensor
  - **6b p** = Adjustment factor I
  - **6C p** = Amplification factor V
  - **6d p** = Maximum flow temperature
  - **6E p** = Mixer runtime
- Briefly press ⁻◯⁺ : The current value for the previously selected parameter is displayed.
- Briefly press ⁻◯⁺ : The current value flashes.
- Turn ⁻◯⁺ to select the required value.
- Briefly press ⁻◯⁺ to save the value.
- Press **mode** until the current room temperature is displayed.

very to your door visit MyTub Ltd - www.mytub.co.uk - info@mytub.

5.4.1 Changing the code (parameter: 5A p)

Setting range: **1** to **10**

Use this parameter if you want to adjust the code after commissioning:

- For systems with a single heating circuit: Select code **1**.

Only one FR 10 can be used per heating system.

5.4.2 Changing the heating circuit configuration (parameter: 5b p)

Setting range: **1** to **3**

Use this parameter if you want to alter the configuration after commissioning:

- Adjusting the corresponding configuration:
  - **1** = unmixed heating circuit
  - **2** = unmixed heating circuit with additional accessory (not availabe in UK).
  - **3** = mixed heating circuit

very to your door visit MyTub Ltd - www.mytub.co.uk - info@mytub.

5.4.3 Adjusting the room temperature sensor (parameter: 6A p)

Setting range: **– 3.0 °C** (K) to **+3.0 °C** (K)

Use this parameter if you want to correct the displayed room temperature.

- Position a precision instrument near FR 10. The precision instrument must not transfer any heat to the FR 10.
- Keep other heat sources, such as sunlight, body heat etc. away for one hour.
- Adjust the displayed room temperature correction value.

5.4.4 Selecting adjustment factor I (parameter: 6b p)

Setting range: **0** % to **100** %

The adjustment **factor I** represents the speed with which the constant control deviation of the room temperature is compensated.

- Selecting adjustment **factor I**:
  - ≤ **40 %**: Select a lower factor to achieve slight room temperature overshoot through slow correction.
  - ≥ **40 %**: Select a higher factor to achieve a more rapid correction by a more severe room temperature overshoot.

very to your door visit MyTub Ltd - www.mytub.co.uk - info@mytub.

5.4.5 Selecting amplification factor V (parameter: 6C p)

Setting range: **40** % to **100** %

Subject to changes in room temperature, the amplification factor V influences the heat demand.

- Selecting amplification factor V:
  - ≤ **50 %**: Select a lower factor to reduce the influence on the heat demand. The selected room temperature is achieved after a longer time with only little overshoot.
  - ≥ **50 %**: Select a higher factor to increase the influence on the heat demand. The selected room temperature is achieved quickly with a tendency towards overshooting.

5.4.6 Selecting the maximum flow temperature (parameter: 6d p)

Setting range: **30 °C** to **85 °C**

- Select the flow temperature to suit the heating circuit.

5.4.7 Selecting the mixer runtime (parameter: 6E p)

Setting range: **10** s to **600** s

5.4.8 Resetting all adjustments

This function returns all controller settings and adjustments to their standard settings. Following such a reset, your installer will need to commission the controller again.

- Hold down − ◯ + and **mode** simultaneously for 15 seconds until the countdown function has expired.

very to your door visit MyTub Ltd - www.mytub.co.uk - info@mytub.

5.5 Selecting the heating program

- Select the heating program with start and stop switching times at the time switch (→ time switch operating instructions).

5.6 Frost protection

The heating (circuit pump) starts if the room temperature in the room where the FR 10 is installed falls below 4 °C or the flow temperature falls below 8 °C. The heating system is started and stopped accordingly to maintain the room temperature of 4 °C or the flow temperature of 8 °C.

very to your door visit MyTub Ltd - www.mytub.co.uk - info@mytub.

6 Troubleshooting

If the boiler has developed a fault, the display will show, for example, **EA. E**. Here, **EA** means a boiler fault; the full stop **.** means an external fault; **E** means error (= fault).
If the FR 10 has developed a fault, the display will show, for example, **03 E**.
Here, **03** refers the the fault number at the FR 10 and **E** stands for error (= fault):

- Contact your installer.

If several faults are active, the fault with the highest priority is displayed.

Display	Cause	Remedy (by installer)
01 E	Boiler no longer reporting.	Check codes and connection of BUS subscribers.
	Incorrect BUS subscriber connected.	Replace incorrect BUS subscriber.
02 E	Internal fault.	Replace FR 10.
03 E	Temperature sensor in FR 10 faulty.	Replace FR 10.
11 E	New BUS subscriber recognised.	Check and adjust configuration.
12 E	BUS subscriber IPM missing.	Check codes and connection of BUS subscribers.
13 E	BUS subscriber changed or replaced.	Check and adjust configuration, codes and connections.
14 E	Inadmissible BUS subscriber connected.	Remove inadmissible BUS subscriber.
AE. E ...	Boiler fault.	Correct the fault in accordance with the details in the boiler documentation.

Tab. 4

very to your door visit MyTub Ltd - www.mytub.co.uk - info@mytub.

Fault	Cause	Remedy
Required room temperature not achieved.	Thermostatic valve(s) are not opened sufficiently.	Fully open the thermostatic valve(s) or ask your installer to check the valves.
	Central heating temperature control on the boiler set too low.	Set the central heating temperature controll higher.
	Air in the heating system.	Bleed radiators and vent the heating system.
Required room temperature greatly exceeded.	FR 10 installed in an unfavourable location, e.g. external wall, near windows, in a draught etc.	Select a better location (→ Chapter 3.1) and ask your installer to relocate FR 10.
Excessive room temperature fluctuations.	Temporary influence of external heat on the room, e.g. through insulation, solar gain, lighting, TV, fireplace etc.	Select a better location (→ Chapter 3.1) and ask your installer to relocate FR 10.
Temperature rises instead of falling.	Time incorrectly set at the time switch (accessory).	Check time setting.
Room temperature excessively high during OFF period.	The building retains a lot of heat.	Select an earlier stop time on the time switch (accessory).
Incorrect or nocontrol.	BUS connection of BUS subscriber faulty.	Ask your installer to check the BUS connection and correct if required, in accordance with the connection diagram.

Tab. 5

very to your door visit MyTub Ltd - www.mytub.co.uk - info@mytub.

If the fault persists:

- Call your installer or customer service and inform them of the fault, quoting the appliance details (from the type plate).

Appliance details

Type:

.....

Part number:

.....

Date of manufacture (FD...):

.....

very to your door visit MyTub Ltd - www.mytub.co.uk - info@mytub.

7 Tips on saving energy

- Regulate the temperature in adjacent rooms via thermostatic valves.
- External heat in the room where th FR 10 is installed (e.g. solar gain, stove etc.) can result in too little heating in adjacent rooms (the heating system remains cold).
- Much energy can be saved by reducing the room temperature via economy phases. Reducing the room temperature by 1 K (°C) enables up to 5% energy to be saved.
  It is not recommended to let the room temperature of heated rooms fall below +15 °C during the daytime, otherwise the cooled-down walls continue to radiate cold and the room temperature rises higher, leading to higher energy consumption than if an even heat supply is applied.
- Good thermal insulation of the building: The set temperature for ☼ **Economy** or ❄ **Frost** is never reached. Nevertheless energy is being saved as the heating system stays off.In that case, switch sooner to the lower operating mode.
- Don't keep windows slightly open for ventilation. This leads to a constant extraction of heat from the room without noticeably improving the ambient air in the room.
- Vent briefly but intensively (open window fully).
- During venting shut off thermostatic valves fully or switch the operating mode to **Frost**.

very to your door visit MyTub Ltd - www.mytub.co.uk - info@mytub.

8 Environmental protection

Environmental protection is a fundamental corporate strategy of the Bosch Group.
The quality of our products, their economy and environmental safety are all of equal importance to us and all environmental protection legislation and regulations are strictly observed.
We use the best possible technology and materials for protecting the environment taking account of economic considerations.

Packaging

We participate in the recycling programmes of the countries in which our products are sold to ensure optimum recycling.
All of our packaging materials are environmental-friendly and can be recycled.

Used appliances

Used appliances contain valuable materials that should be recycled.
The various assemblies can be easily dismantled and synthetic materials are marked accordingly. Assemblies can therefore be sorted by composition and passed on for recycling or disposal.

very to your door visit MyTub Ltd - www.mytub.co.uk - info@mytub.

Notes

very to your door visit MyTub Ltd - www.mytub.co.uk - info@mytub.

Notes

very to your door visit MyTub Ltd - www.mytub.co.uk - info@mytub.

Notes

very to your door visit MyTub Ltd - www.mytub.co.uk - info@mytub.

067206177608

CONTACT INFORMATION

WORCESTER, BOSCH GROUP:

TECHNICAL:	08705 266241
SERVICE:	08457 256206
SPARES:	01905 752571
LITERATURE:	01905 752556
TRAINING:	01905 752526
SALES:	01905 752640

WEBSITE: www.worcester-bosch.co.uk

Dedicated to heating comfort

Worcester, Bosch Group
Cotswold Way, Warndon, Worcester WR4 9SW
Tel. 01905 754624 Fax. 01905 754619
Worcester, Bosch Group is a brand name of
Bosch Thermotechnology Ltd.
www.worcester-bosch.co.uk

very to your door visit MyTub Ltd - www.mytub.co.uk - info@mytub.