TECHNICAL DATA SHEET

BRISTAN

RUBY SINK MIXER
Ruby Easyfit Sink Mixer
Chrome Plated

Product Specification

Product Code:	RU SNK EF C
Finish:	Chrome
Product Type:	Contemporary
Construction:	Body is of brass construction and is designed to conform to BS EN 200
Valve Type:	Ceramic Cartridge
Supply:	Suitable for all plumbing systems **Preferably Balanced Pressures**
Inlet Connections:	½" BSP
Working Pressures:	Min 0.5bar, Max 5.0bar

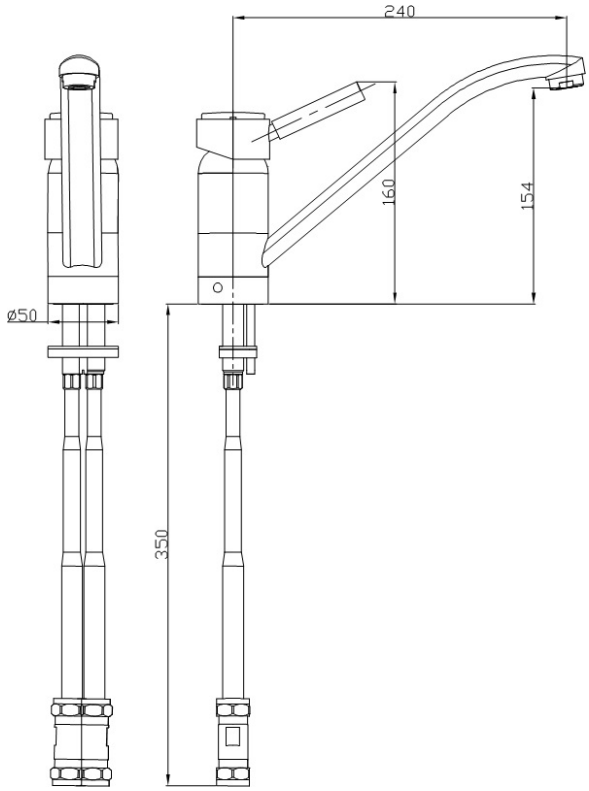

Additional Information

- Unique patented technology.
- Designed with the installer in mind to ensure installation and future maintenance is made quick and easy.
- Ceramic disc cartridge for added durability and ease of use.
- Supplied with flexible connecting pipes.
- Supplied with easy to use metal lever handle.
- Chrome plated to BS EN 248.

Technical Advice: For further information please call 0844 7016273 or email customercare@bristan.com

Guarantee: 5 years covering manufacturing faults.

Flow Rates (litres per minute)

System Pressure	0.5bar	1.0bar	2.0bar	3.0bar
RU SNK EF C (Mixed)				

Bristan, Birch Coppice Business Park, Dordon, Tamworth, B78 1SG
Telephone: 0844 701 6274 Facsimile: 0844 701 6275
Web Site: www.bristan.com Email: enquire@bristan.com

EASY TO USE | 5 Year Guarantee | 24 Hour Delivery | 0844 7016273

D1

The information contained on this page was correct at date of issue. Fitting dimensions are provided as a guide only. Some variation may occur due to manufacturing tolerances. Bristan pursues a policy of continuing improvement in design and performance of its products and so reserves the right to change specifications without prior notice.

For latest prices and delivery to your door visit MyTub Ltd - www.mytub.co.uk - info@mytub.co.uk