Ideal Standard
Serenis
shower enclosures

BODY & MIND

Ideal Standard

A BEAUTIFUL NEW ANGLE ON SHOWERING

At Ideal Standard, we are dedicated to enhancing the total environment of your bathroom by combining innovation and beauty for a unique body and mind experience. We are constantly searching for ways to integrate fantasy with function. To create practical solutions that allow you to express your own personal flair. It's the philosophy behind the creation of Serenis, our latest range of shower enclosures. Conceived by the multi-award winning design consultancy PearsonLloyd, Serenis reinterprets the experience of 'taking a shower'.

Ideal Standard

In designing the new Serenis Collection for Ideal Standard, PearsonLloyd were influenced by modern architectural spaces, finely crafted tools and the traditional rituals of cleansing. The result is a trio of beautifully constructed and stunning shower enclosures, the Serenis 360° and Serenis 180° are crafted from glass and metal into soft and almost sculptural forms that echo the simple pleasure and sensuality of showering. Matched with a water delivery system that is truly innovative, Serenis redefines the look, quality and experience of a shower, offering you a range of pure, long-lasting designs for a future of luxurious and liberating showers. Your bathroom will never seem the same again.

For latest prices and delivery to your door visit MyTub Ltd -

THE SERENIS WATER DELIVERY SYSTEM: CONTEMPORARY AND TRULY INNOVATIVE.

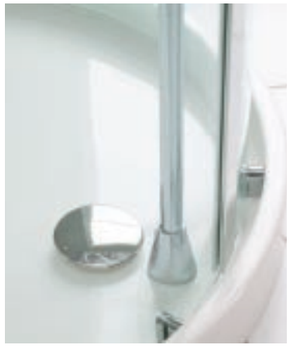

The Serenis 360° and 180° incorporate the new Serenis water delivery system* that offers you a totally original shower experience. This system uses Ideal Standard's innovative 'in-line valve' technology. Water is piped through the central column of the enclosure where separate in-line controls let you decide whether the water goes through the fixed overhead shower spray or through the hand spray. As these controls are individual, if your water pressure is high enough you can use both shower heads simultaneously creating a really luxurious shower.

Another exceptional feature of the Serenis water delivery system is the design of the 'on/off' valve controls. These are positioned both inside and outside the enclosure so that you can turn the shower on from outside the shower enclosure, eliminating the 'dead leg' of cold water** before you enter the shower, and off from the inside allowing you to dry yourself within the enclosure where the environment is nice and warm – pure genius. And finally, the temperature control can be accessed from inside and outside the enclosure, allowing you complete control throughout your showering experience. Showering at its best!

*Serenis water delivery system is suitable for high pressure installations ONLY. Please check with your installer whether your system requires an additional pump.

**The dead leg of cold water will be eliminated from either the fixed head or flexible hose dependant upon which in line valve was left open after the previous shower.

For latest prices and delivery to your door visit MyTub Ltd -

SERENIS 360°

Sheets of crystal clear glass almost six and a half feet tall are sculpted into an arc of geometric precision. The arc of glass is then mounted in an elegant setting of acrylic, aluminium and polished chrome and fitted with the latest in shower technology. With its elegant lines and delicate appearance, the result is the Serenis 360°.

For latest prices and delivery to your door visit MyTub Ltd -

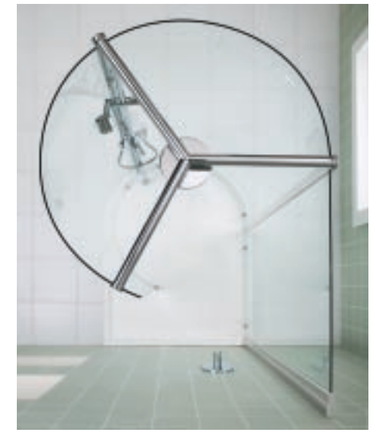

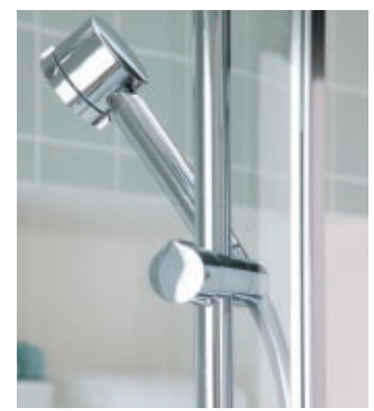

SERENIS 360° – PENINSULAR

The arc inspired design of the Peninsular marks it out as a stand-alone shower enclosure of truly innovative conception. Peninsular incorporates several excellent features such as:

- 6mm safety glass with easy clean coating
- Silver finish frame
- Chrome plated brass water delivery system
- On / Off water control both inside and outside the enclosure
- Fixed 180mm diameter single function overhead shower
- Shower kit with a three function high-pressure hand spray
- The enclosure is guaranteed for 10 years
- The water delivery system is guaranteed for 5 years
- The acrylic shower tray is guaranteed for 25 years

For latest prices and delivery to your door visit MyTub Ltd -

SERENIS 360° – CORNER

The Corner is available as a right and left hand shower enclosure, and incorporates the same excellent features as the Peninsular:

- 6mm safety glass with easy clean coating
- Silver finish frame
- Chrome plated brass water delivery system
- On/Off water control both inside and outside the enclosure
- Fixed 180mm diameter single function overhead shower
- Shower kit with a three function high-pressure hand spray
- The enclosure is guaranteed for 10 years
- The water delivery system is guaranteed for 5 years
- The acrylic shower tray is guaranteed for 25 years

The Serenis 360° is plumbed through the floor, taking the water up through the central column of the shower enclosure.

The water is delivered through the built-in overhead shower or through the hand spray, or both*.

*Subject to water pressure.

0845 303 8383 - www.mytub.co.uk - info@mytub.co.uk

SERENIS 180°

With the soft and sensuous curves of the Serenis 180°, a wave of free-flowing glass sweeps gently in a natural arc that mirrors the true pleasure of showering. Installed at the heart of your bathroom, the Serenis 180° will turn the simple act of taking a shower into something truly liberating.

For latest prices and delivery to your door visit MyTub Ltd -

SERENIS 180° CORNER

The Serenis 180° Corner is available with the dedicated water delivery system or can be combined with the shower kit of your choice for an elegant showering solution. The Serenis 180° Corner incorporates several excellent features such as:

- 6mm safety glass with easy clean coating
- Silver finish frame
- Chrome plated brass water delivery system
- On/Off water control both inside and outside the enclosure
- Fixed 180mm diameter single function overhead shower
- Shower kit with a three function high-pressure hand spray
- The enclosure is guaranteed for 10 years
- The water delivery system is guaranteed for 5 years
- The acrylic shower tray is guaranteed for 25 years

0845 303 8383 - www.mytub.co.uk - info@mytub.co.uk

SERENIS 180° ALCOVE

With its sleek curved glass and graceful silver frame, the Serenis 180° Alcove looks subtle and stylish in an alcove style shower space.

The Serenis 180° Alcove incorporates several excellent features such as:

- 6mm safety glass with easy clean coating
- Silver finish frame
- Chrome plated brass water delivery system
- On/Off water control both inside and outside the enclosure
- Fixed 180mm diameter single function showerhead
- Shower kit with a three function high-pressure hand spray
- The enclosure is guaranteed for 10 years
- The water delivery system is guaranteed for 5 years
- The acrylic shower tray is guaranteed for 25 years

The glass walls of the Serenis range are all positioned directly onto the inside of the shower tray and fixed onto design-dedicated mouldings, which means they are completely silicon free.

For latest prices and delivery to your door visit MyTub Ltd -

For latest prices and delivery to your door visit MyTub Ltd -

Resting on elegant metal feet, looking even more like avant-garde sculptures, the elegance and grace of their design makes Serenis perfect for the Wetroom* showering experience.

All Serenis enclosures are suitable for Wetroom installation – pictured left is the 360º Corner model.

*Ensure the room is adequately waterproofed prior to installing a Wetroom enclosure.

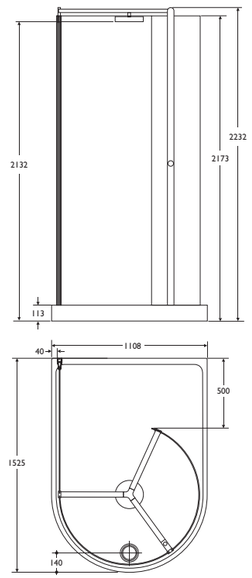

Serenis 360 Peninsular water delivery 1525 LH

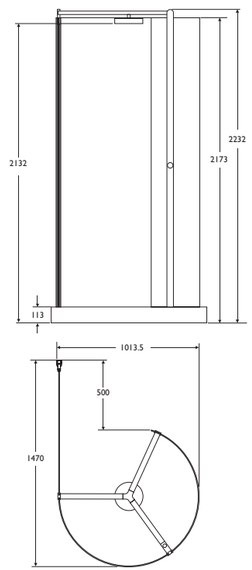

Serenis 360 Peninsular water delivery 1525 LH wet room

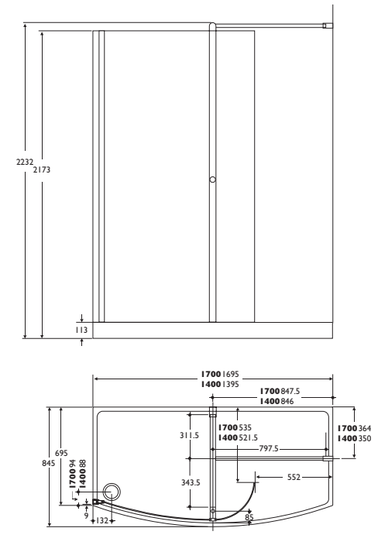

Serenis 180 Alcove no water delivery 1700 LH
Serenis 180 Alcove no water delivery 1400 LH

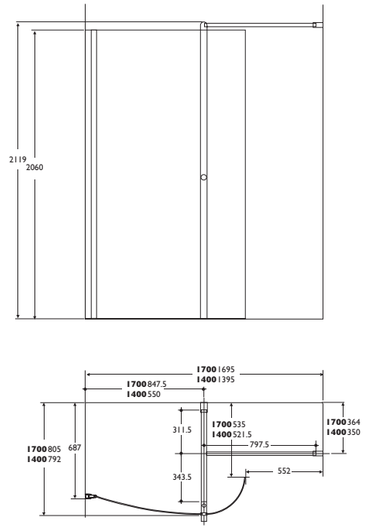

Serenis 180 Alcove no water delivery 1700 LH wet room
Serenis 180 Alcove no water delivery 1400 LH wet room

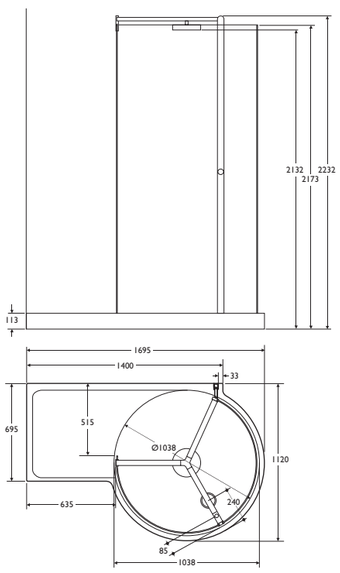

Serenis 360 Corner water delivery 1700LH

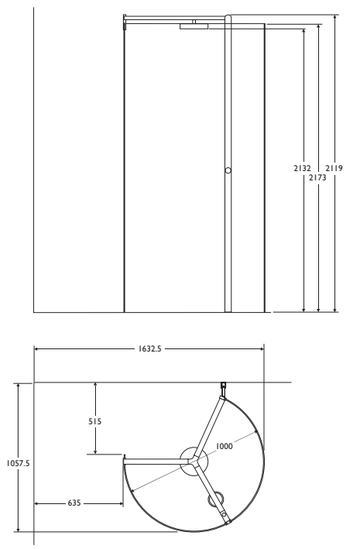

Serenis 360 Corner water delivery 1700 wet room

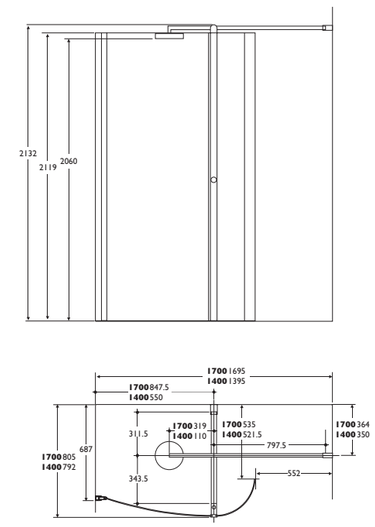

Serenis 180 Alcove water delivery 1700 LH wet room
Serenis 180 Alcove water delivery 1400 LH wet room

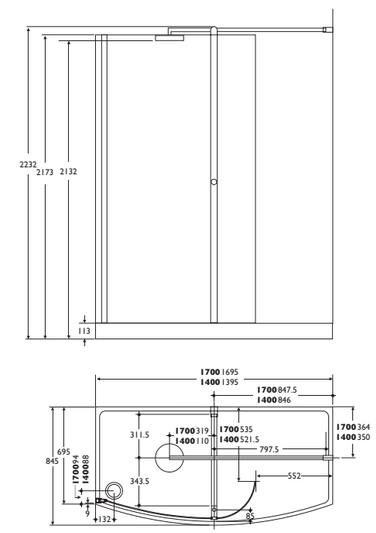

Serenis 180 Alcove water delivery 1700 LH
Serenis 180 Alcove water delivery 1400 LH

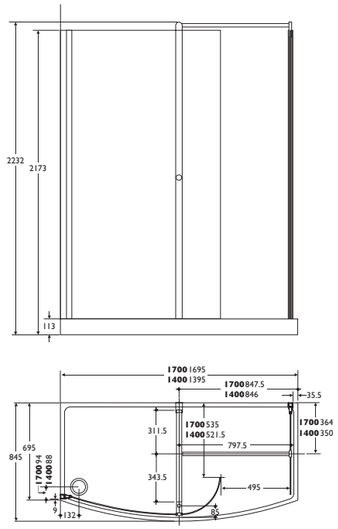

Serenis 180 Corner no water delivery 1700 LH
Serenis 180 Corner no water delivery 1400 LH

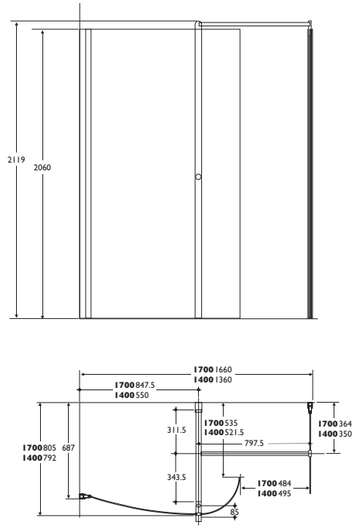

Serenis 180 Corner no water delivery 1700 LH wet room
Serenis 180 Corner no water delivery 1400 LH wet room

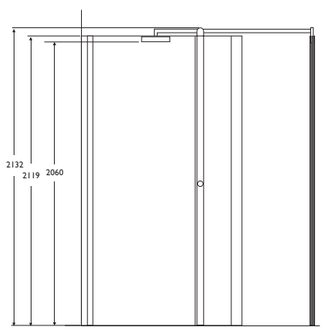

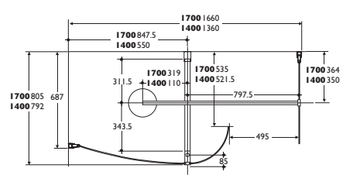

Serenis 180 Corner water delivery 1700 LH wet room
Serenis 180 Corner water delivery 1400 LH wet room

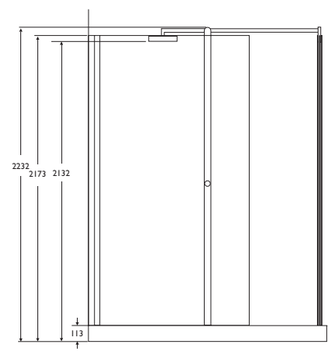

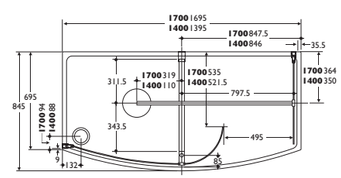

Serenis 180 Corner water delivery 1700 LH
Serenis 180 Corner water delivery 1400 LH

Serenis 360 (pp 6-11): Wall Tiles: Palma tiles in Aqua Naturelle
Floor Tiles: 330x330mm White Caldero

Serenis Wet Room (pp 10-11): Wall tiles: 330x330 loft tiles in brown from Worlds End Tiles, Mosaic tiles in shelf: vetricolor tiles in colour from Worlds End Tiles

Serenis 180 (pp 12-17): Wall tiles (overhead shots): Cappuccino Mosaic Marble, Wall tiles: 50x30 Quartzite tiles from Tile Superstore, Floor Tiles: 330x330 Brown Leather Mocca Expressioni, 8 drawer unit: White and birch from Ikea

Guarantee and advice

Our confidence in the quality and reliability of Ideal Standard products enables us to offer long guarantees for complete peace of mind. Ideal Standard shower enclosures are guaranteed for ten years, Ideal Standard Water delivery system for 5 years and Ideal Standard shower trays for 25 years. Our guarantee covers all products that have been used in the manner they were intended, and does not apply to any products that have been misused or abused in any way. If any product part is found to be faulty, simply return it immediately via your chain of supply with proof of purchase (retailer receipt or installer invoice) and they will contact us, and we will organise a replacement within 48 hours. This guarantee does not affect your statutory rights. If you need installation advice, a qualified plumber will be happy to help you. We recommend you choose one who is a member of the professional bodies: the Association of Plumbing & Heating Contractors, the Institute of Plumbing or the Scottish & Northern Ireland Plumbing Employers Federation.

Once you've bought your Ideal Standard shower, the service doesn't stop there. Our technical support teams are ready to help you with any queries you may have about your new purchase. Just call them on 0870 129 6085 for instant expert help.

Ideal Standard pursues a policy of continuing improvement in design and performance of its products. Ideal Standard therefore reserves the right to vary specifications without notice. Colour reproduction of the Ideal Standard range is accurate within the limitations of the printing of this brochure. P692(1) 9/05

All bathroom and shower products featured in this brochure are produced by Ideal Standard (UK) Ltd. For more information please see our Live The Ideal, Trevi and Showers brochures. To obtain a copy please telephone **0800 614191**

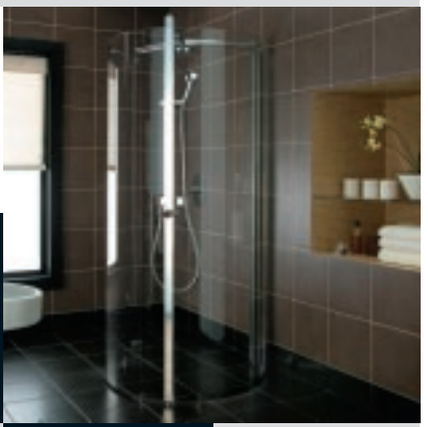

B O D Y & M I N D

Ideal Standard

The Bathroom Works
National Avenue
Kingston upon Hull
HU5 4HS
T 01482 346461
F 01482 445886
www.idealstandard.co.uk