HEATRAE SADIA
The quality name in water heating

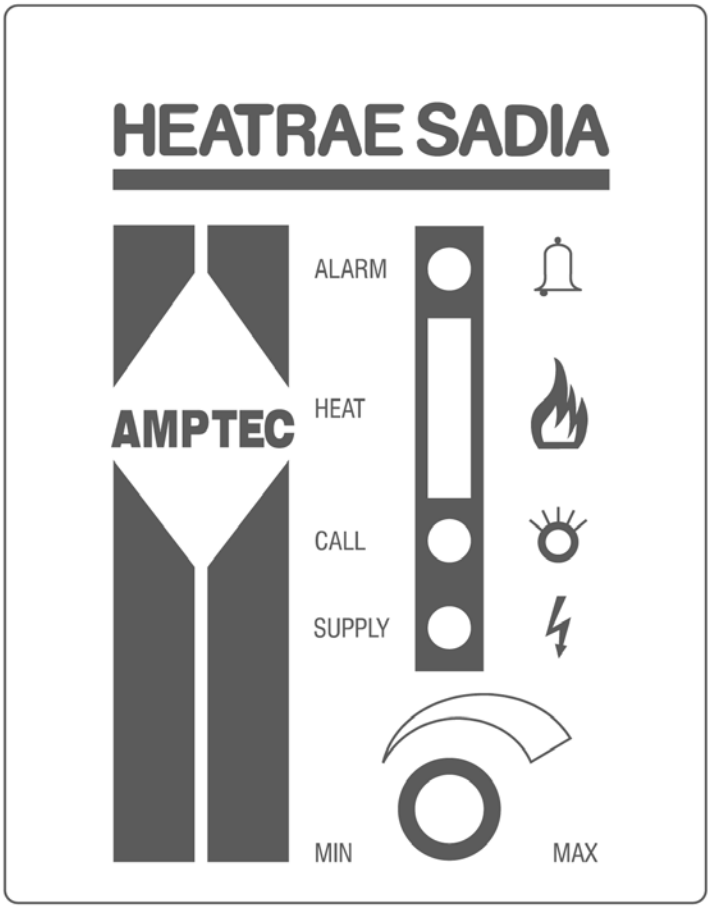

Models:

95 022 001 C-400	GC No.EB-205-06
95 022 002 C-600	GC No.EB-205-02
95 022 003 C-900	GC No.EB-205-03
95 022 004 C-1100	GC No.EB-205-01
95 022 005 C-1200	GC No.EB-205-04
95 022 101 U-401	GC No.EB-205-08
95 022 102 U-601	GC No.EB-205-09
95 022 103 U-901	GC No.EB-205-10
95 022 104 U-1101	GC No.EB-205-11
95 022 105 U-1201	GC No.EB-205-12

Amptec Electric Flow Boiler

Fitting Instructions and User Guide

For latest prices and delivery to your door visit MyTub Ltd - www.mytub.co.uk - info@mytub.co.uk 0844 556 1818

THANK YOU FOR PURCHASING THIS HEATRAE SADIA AMPTEC FLOW BOILER. IT HAS BEEN DEVELOPED TO PROVIDE YOU WITH MANY YEARS OF TROUBLE-FREE SERVICE WHEN INSTALLED IN THE PROPER MANNER.

PLEASE READ AND UNDERSTAND THESE INSTRUCTION PRIOR TO INSTALLING YOUR HEATRAE SADIA AMPTEC FLOW BOILER. FOLLOWING INSTALLATION AND COMMISSIONING, THE OPERATION OF THE HEATER SHOULD BE EXPLAINED TO THE CUSTOMER AND THESE INSTRUCTIONS LEFT WITH THEM FOR FUTURE REFERENCE.

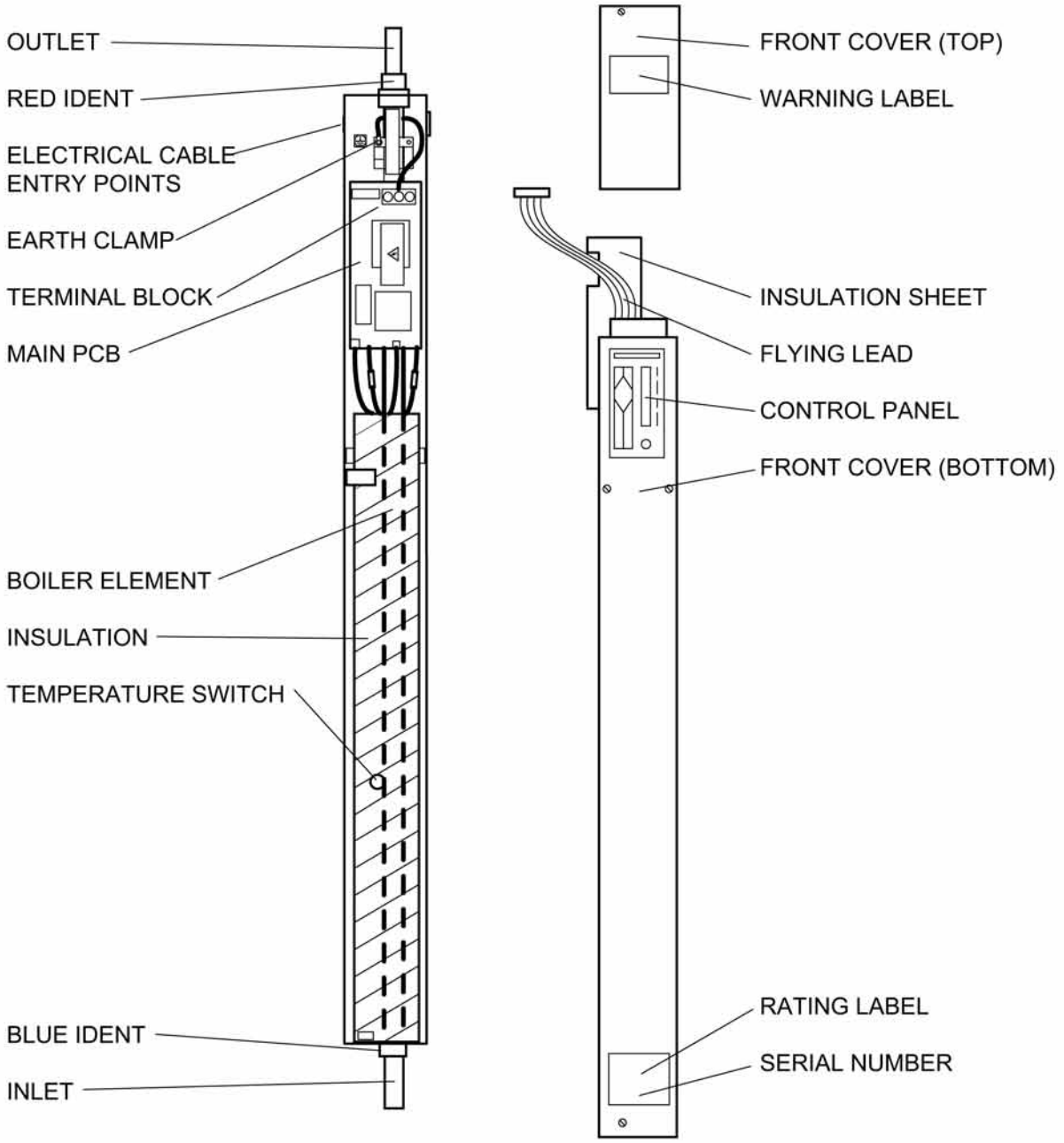

FIGURE ONE: MAIN COMPONENTS OF AMPTEC ELECTRIC FLOW BOILER

For latest prices and delivery to your door visit MyTub Ltd - www.mytub.co.uk - info@mytub.co.uk 0844 556 1818

DESCRIPTION

The AMPTEC electric flow boiler is designed to heat re-circulated water used in wet central heating systems. The water is heated when it is passed over electric immersion elements, which are contained in a chamber. The temperature of the water is monitored and controlled by a modulation technique switching on the immersion elements. The switching of the elements is carried out by solid-state technology contained in the control section of the boiler. The operation of the boiler can be controlled by standard programmers, room thermostats, etc. The pump should be connected to the boiler control, which provides the run-on facility.

FEATURES

- Electric flow boiler for wet central heating systems.
- Domestic hot water is available from a cylinder.
- Can be used in a sealed or open vented system installations.
- No flue or fuel tank required.
- Quiet in operation.
- Operates from standard programmers, room thermostats, etc.
- Pump run-on facility.
- Solid-state technology enables zero volt switching.
- Soft start and soft modulation.
- Front panel operation indicators.
- User adjustment of the operating temperature on the front panel.
- Self check every time it operates.
- Optical isolation to enable connection of more boilers on single or three phase supplies.
- Electrical tails terminations inside the boiler.
- Safety trip for no water or no flow situations.

TECHNICAL SPECIFICATION

Output Temperature Control Range:	(C series)	65°C to 80°C.
	(U Series)	30°C to 60°C
Operating voltage		200V - 245V 50Hz
Pump supply fuse (internal)		T 2A 240V - 20x5mm.
'RUN' control input signal requires		200V - 245V 50Hz
'RUN' control input signal draws less than 0.25A.		10mA typical.
Optical isolation		Between the control signals and the boiler supply.
Over temperature trips		95 and 100°C
Water content		1.3 litres

Product code	Boiler type	220V / Btu	240V / Btu	Size
95 022 001	C400	3.5kW / 11,900Btu	4kW / 13,600Btu	1050 x 90 x 90mm
95 022 101	U401	3.5kW / 11,900Btu	4kW / 13,600Btu	1050 x 90 x 90mm
95 022 002	C600	5kW / 17,000Btu	6kW / 20,400Btu	1050 x 90 x 90mm
95 022 102	U601	5kW / 17,000Btu	6kW / 20,400Btu	1050 x 90 x 90mm
95 022 003	C900	7.5kW / 25,600Btu	9kW / 30,700Btu	1050 x 90 x 90mm
95 022 103	U901	7.5kW / 25,600Btu	9kW / 30,700Btu	1050 x 90 x 90mm
95 022 004	C1100	9kW / 30,700Btu	11kW / 37,500Btu	1050 x 90 x 90mm
95 022 104	U1101	9kW / 30,700Btu	1kW / 37,500Btu	1050 x 90 x 90mm
95 022 005	C1200	10kW / 34,000Btu	12kW / 40,900Btu	1050 x 90 x 90mm
95 022 105	U1201	10kW / 34,000Btu	12kW / 40,900Btu	1050 x 90 x 90mm

For latest prices and delivery to your door visit MyTub Ltd - www.mytub.co.uk - info@mytub.co.uk 0844 556 1818

INSTALLATION

Care must be taken when handling and connecting the boiler not to damage or stress it in any way. Prior to installation the boiler must be stored in a dry, safe place.

The boiler must be mounted in an UPRIGHT position. The boiler must be fixed to a wall before connecting pipework. When choosing the position for the boiler, ensure sufficient clearances to house the unit and for servicing. 50mm minimum clearance each side of the boiler is required. A drain valve at the base of the boiler is strongly recommended. It must be sited in a dry, ventilated position, frost free and not subjected to extremes of temperature.

Note. Before connecting the pipework, ensure the rubber seal at the top of the boiler is firmly in place; check it has not become loose in transit. The warranty will be invalid if water leaks into the boiler.

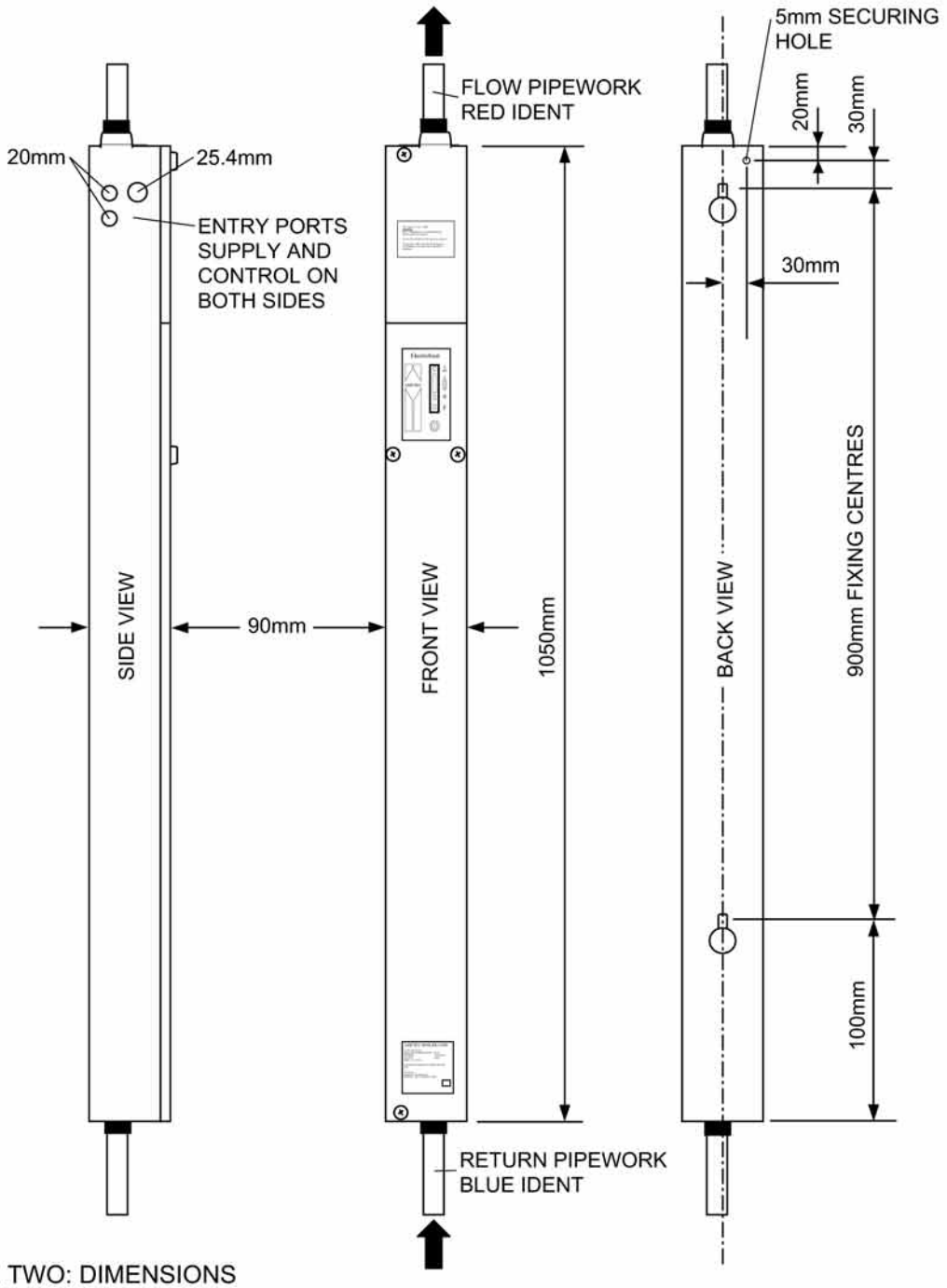

FIGURE TWO: DIMENSIONS

For latest prices and delivery to your door visit MyTub Ltd - www.mytub.co.uk - info@mytub.co.uk 0844 556 1818

INSTALLATION PLUMBING

IT IS THE INSTALLER'S RESPONSIBILITY TO ENSURE THAT THE INSTALLATION DOES NOT CONTRAVENE THE REQUIREMENTS OF THE WATER SUPPLY REGULATIONS, BUILDING REGUALTIONS OR LOCAL AUTHORITY REGULATIONS.

The boiler must be installed by a qualified, competent tradesman who is aware of and will comply with all relevant standards that are applicable: e.g. Building Regulations, the Local Authority Regulations, the Water Supply Regulations and undertaking the relevant British Standards. The system must be flushed in accordance with BS 7593 and in accordance with the supplied instructions and drawings to ensure proper operation.

The boilers contain a very small amount of water, and so require a sufficient flow rate of water to ensure proper operation. Models 400 and 600 require a minimum flow of 6 litres/minute, and models 900, 1100 & 1200 require a minimum flow of 12 litres/minute. Insufficient flow of water through the boiler will cause nuisance trip outs. The maximum temperature differential between input and output of the boiler must not exceed 14^{0}C. If the temperature across the boiler exceeds this then the flow rate is too low and will potentially damage the boiler. Set the flow rate to give 5 - 10^{0}C across the boiler on full heat.

The output FLOW pipe at the TOP of the boiler is identified RED. The input RETURN pipe at the BOTTOM is identified BLUE. Ensure that the direction of flow is correct through the boiler after installation. Set the pump on maximum flow rate.

Pipework connections on all models are 22mm.

Use standard size pipework. DO NOT SOLDER DIRECTLY ONTO THE BOILER TAILS. Push-on or compression fittings are suitable for connecting directly onto the boiler tails. Fit a 22mm elbow to the top of the boiler, and after 100 – 150mm of horizontal pipework fit an automatic air vent, or connect the expansion pipework on open vented systems to provide a route for air to vent. DO NOT FIT THE AAV DIRECTLY ABOVE THE BOILER.

The Amptec boiler is suitable for operation in sealed or open vented systems. It is also suitable for schemes such as heating only, W plan, S plan, zone heating, under floor heating, micro-bore via a manifold, etc. If you are unsure about your application regarding suitability of the boiler please do not hesitate to contact your local supplier or Heatrae Sadia directly.

The cost of installation can be reduced if the electric flow boiler is used for heating only. Use a direct type cylinder with immersion elements and a time clock for the domestic hot water, then connect the electric flow boiler directly to the heating circuit and control it by a programmable room thermostat. If the radiator circuit has a continuously open route for the water flow, then a bypass is not required. The boiler sizing is for heating only in this case and does not have to be increased to allow for domestic hot water as well.

Ensure there is always an open route for the water to flow in any installation, to meet the required minimum flow rate of the boilers and to allow for the pump over run. If an open route through the heating circuit can not be guaranteed, then a bypass, fitted with an automatic bypass valve, must be fitted which meets the required minimum flow rates for the boiler.

The bypass must have a minimum of either 2 metres of 22mm continuous pipework, or be routed through a radiator with minimum dimensions of 600 x 600mm. Automatic pressure opening valves must be used with the bypass circuit, ensure they are installed correctly as per the manufacturer's instructions. Gate valves are not suitable. DO NOT FIT A VALVE BETWEEN THE BOILER AND THE SAFETY PRESSURE RELIEF VALVE OR EXPANSION RELIEF SYSTEM.

The boilers are suitable for operating pressures up to 3 bar. Normal sealed systems operate at 1 to 1.5 bar. Ensure a safety pressure relief valve is fitted to all sealed systems. With open vented installations, ensure there is a sufficient head of water for the pump to supply the full flow through the boiler of at least 1½ metres between the bottom of the F & E tank and the top of the boiler.

For latest prices and delivery to your door visit MyTub Ltd - www.mytub.co.uk - info@mytub.co.uk 0844 556 1818

NOTE: TO COMPLY WITH BUILDING REGULATIONS, PART L (PART J IN SCOTLAND), WHEN THE AMPTEC IS USED FOR CENTRAL HEATING PURPOSES, A ROOM THERMOSTAT MUST BE FITTED TO CONTROL THE BOILER (SEE PAGE 15).
Do not fit thermostatic radiator valves to the room with the control thermostat, other rooms may be fitted with thermostatic radiator valves. DO NOT OPERATE UNDER THERMOSTATIC RADIATOR VALVES ONLY.

Use standard pumps, controls, room thermostat, valves, etc. The main electrical power (high current) must be routed directly to the boiler via an MCB and RCD, not through the controls. Only a control signal to the boiler comes from the programmer. The switching of the high power current is done inside the boiler.

For installations with more than one boiler, mount the boilers side-by-side with a minimum of 50mm gap between each boiler, output flow tails at the top and the returns at the bottom. 'Tee' in the flows together, increasing in pipe size at each boiler to ensure full flow to each boiler. E.g. for 3 x 1200 boilers, first boiler use a 22mm elbow to the second boiler. Second boiler tee 22mm in from first boiler, 22mm branch to second boiler, 28mm to third boiler. Third boiler tee 28mm in from second boiler, 22mm branch to third boiler, 35mm away to heating circuit. Repeat for the return connections. Single pump in the 35mm flow line, ensure sufficient flow for all 3 boilers, i.e. (for 3 x 1200 boilers requires 3 x 12 l/m = 36 litres/minute minimum). Do not reduce pipework before 'teeing'. See figure four on page 8.

When filling the system check for leaks. THE WARRANTY WILL BE INVALIDATED IF WATER LEAKS INTO THE BOILER. ENSURE ALL JOINTS ABOVE THE BOILER ARE SOUND.

After installation the system must first be flushed out in accordance with BS 7593:1992 before adding the inhibitor. Fernox "Superfloc", or BetzDearborn Setinel X300 or X400 are ideal flushing agents for new and existing systems. After flushing the correct amount of inhibitor must be added before use. Fernox "Superconcentrate", or MB-1, or BetzDearborn Sentinel X100 can be used for most water areas, however we recommend you should check with your local water authority to ensure suitability. Check the inhibitor concentration after installation and periodically thereafter to ensure correct protection.

FAILURE TO FLUSH PROPERLY OR INADEQUATE INHIBITOR IN THE SYSTEM WILL INVALIDATE THE WARRANTY.

For latest prices and delivery to your door visit MyTub Ltd - www.mytub.co.uk - info@mytub.co.uk 0844 556 1818

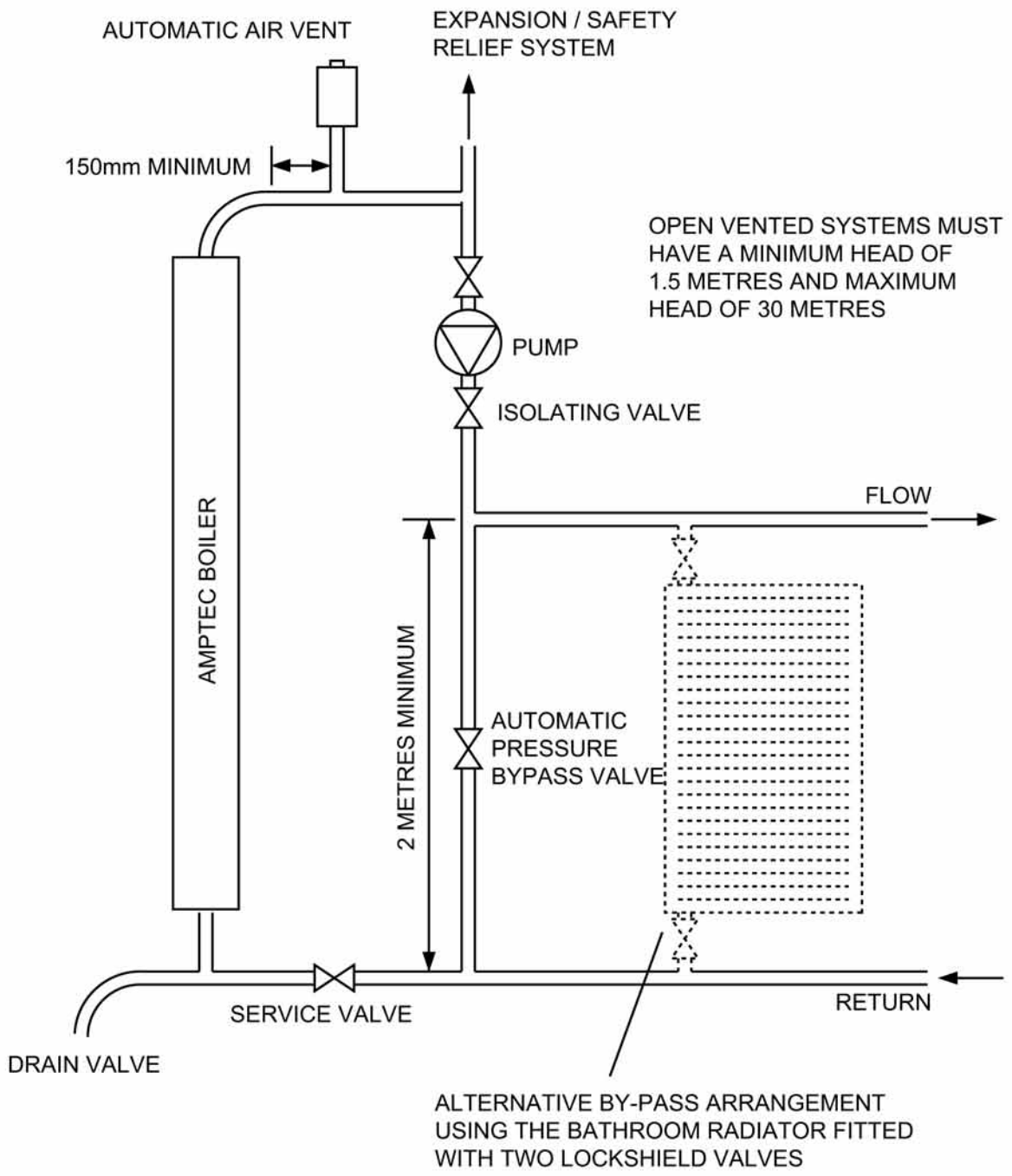

FIGURE THREE: BASIC PLUMBING LAYOUT

For latest prices and delivery to your door visit MyTub Ltd - www.mytub.co.uk - info@mytub.co.uk 0844 556 1818

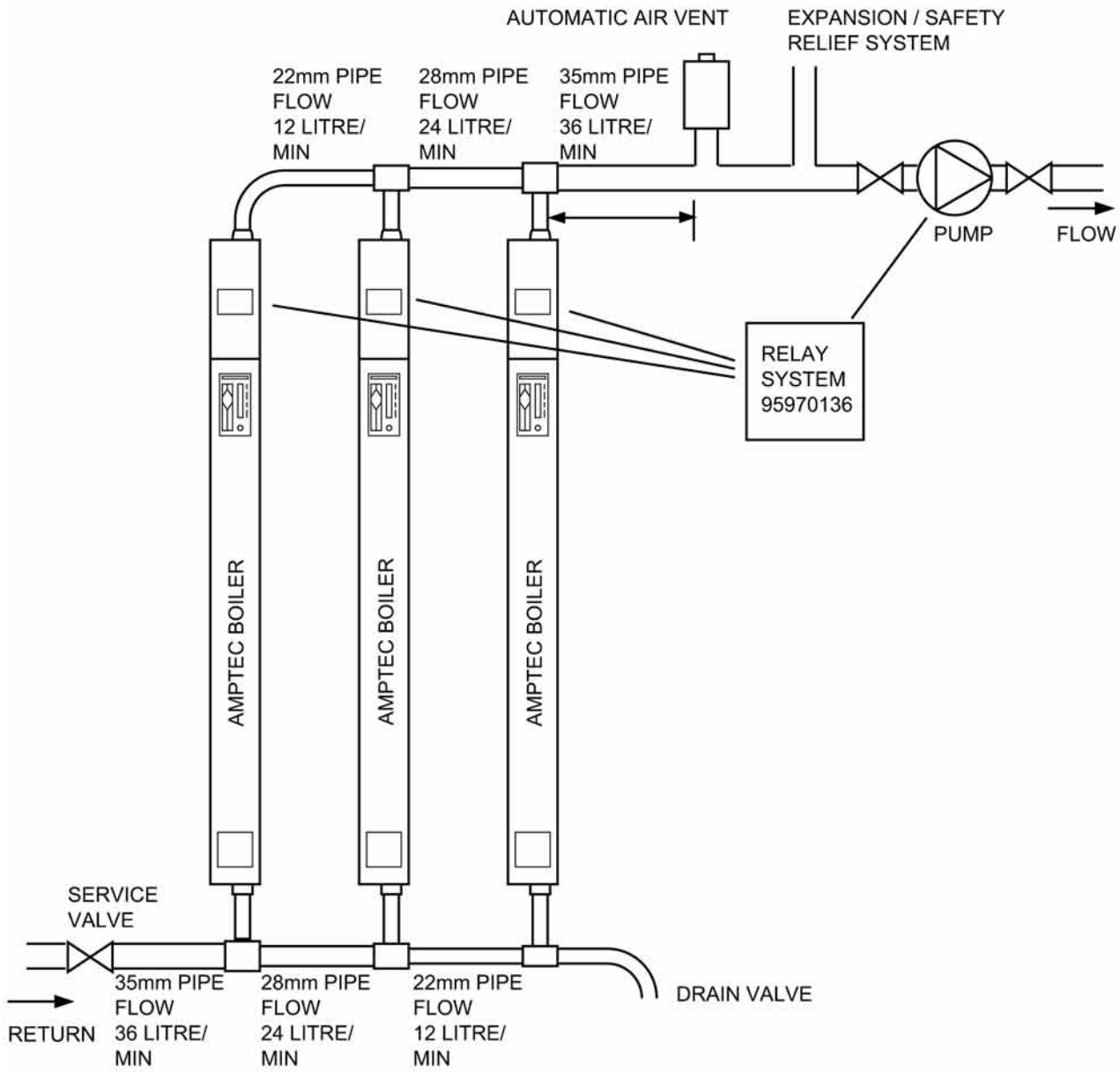

FIGURE FOUR: THREE BOILER PLUMBING SCHEMATIC

A typical plumbing schematic connecting 3 x 1200 boilers together.
NOTE the increase in pipework sizing to ensure proper flow through the boilers.
Ensure there are no restrictions in the heating circuit such as thermostatic radiator valves etc.
Expansion vessel etc. has not been shown on this schematic.
For 2 x 1200 boilers, 28mm pipework flow and return is required.
A bypass must be fitted. Preference should be made for a 600 x 600 radiator.

For latest prices and delivery to your door visit MyTub Ltd - www.mytub.co.uk - info@mytub.co.uk 0844 556 1818

INSTALLATION - ELECTRICAL REQUIREMENTS

ALL WIRING MUST BE CARRIED OUT IN ACCORDANCE WITH CURRENT IEE WIRING REGULATIONS.

The AMPTEC boiler must be installed by a qualified competent tradesman in accordance with supplied instructions and drawings to ensure correct operation.

Check the main incoming supply to the property to ensure there is sufficient current and voltage for the size of the boiler or boilers to be installed. Remember to also take account of the supply requirements for the rest of the property. Ensure the correct cable size is used to feed the boiler (refer to IEE wiring regulations).

A double pole RCD with a trip level sensitivity of 30mA and capable of breaking the full load current to BS EN 61008:1994, must be used.

In order to provide a means of isolation, the boiler must be connected to the supply through a double pole linked switch with a minimum contact gap of 3mm in all poles. The RCD is suitable for this requirement if it is mounted in close proximity to the boiler.

A correctly rated MCB must be used in the supply, see Technical Specifications. An additional 3A supply is required for the controls etc. NOTE, a blank must be fitted between each MCB to provide ventilation, check with the MCB manufacture/supplier.

NOTE: The high current mains supply MUST NOT be routed through the programmer, controls etc. Follow the wiring diagrams. Use a standard programmer, room thermostat, etc. The high current switching is carried out inside the boiler, only standard switched live (low current) control signals are supplied by the programmer etc.

Electrical Connections

Access can be gained to the electrical connections by removing the top front panel.

1. CONN5: MAIN POWER.Main power-supply cables. Connect the power cables from the power "supply" (CONN5) terminals on the PCB assembly in the boiler directly to the isolation switch, live, neutral and earth. Use the correct rated cable. Do not connect the power through the programmer, thermostats etc. The main power PCB terminals in the boiler are suitable for cables up to 10mm^2. NOTE: THESE CONNECTIONS MUST BE TIGHT. LOOSE CONNECTIONS WILL CAUSE A FIRE. BURNING AT CONN5 CONNECTOR IS NOT COVERED BY THE WARRENTY.
2. CONN1, pins 2 & 3: CONTROL SIGNAL.Connect switched live to 'R' and neutral to 'N' on the control terminal block in the boiler to the switched live and neutral from the programmer control circuit. A neutral must be connected, as this control signal is optically isolated from the main supply in the boiler and will not run without a neutral. Do not connect any wires to the terminal marked N/C.
3. CONN1 pins 4, 5 & 6: PUMP CONNECTIONS. The supply to the pump must be connected to the 'PUMP' terminal on the control terminal block in the boiler. This supply is fused in the boiler at 2A.

Connections for 2 or more boilers.

1. CONN5: Main power-supply cables. Connect each boiler to its supply live, neutral, and earth, as described above. The supplies to each boiler can be on different phases if using a 3-phase supply.

2. CONN1 pins 2 & 3: Control signal. Join all the boiler 'R' terminals on the control terminal block together, and then connect them to the switched live control signal to the programmer control circuit. Connect all the boiler 'N' terminals on the control terminal block together and then to neutral on the programmer control circuit.

3. CONN1: Pump connections. The pump must be connected through a relay assembly to ensure that the pump always operates if any one boiler is running. See page 26. Relay box 95970135 is required for a two boiler system and 95970136 is required for a 3 boiler system.

Check the main electrical power connections are tight. Support the back of the PCB behind the power terminals when tightening the main power terminals. Loose connections can cause a fire and will invalidate the warranty.

The control RUN signal is optically isolated from the main boiler supply to enable different phases to be used between boilers. The control signal required to operate the boiler is 220V - 240V at a very low current, typically 10mA.

For latest prices and delivery to your door visit MyTub Ltd - www.mytub.co.uk - info@mytub.co.uk 0844 556 1818

WARNING: THIS APPLIANCE MUST BE EARTHED.

All exposed pipework must be earthed in accordance with IEE Regulations.

After installation, preliminary electrical checks i.e. short circuit, earth continuity, resistance to earth and check for correct polarity etc. must be carried out.

Before connecting the electrical supply, ensure the system is full of water and set to the correct pressure (sealed systems), check for leaks. It is essential that all the air is purged from the system. Only then can the supply be switched on.

On completion of the work the installation must be tested to IEE Regulations and an NICEIC Inspection and Completion Certificate must be issued.

Please take note of the installation information. If in doubt please contact your local supplier or Heatrae Sadia.

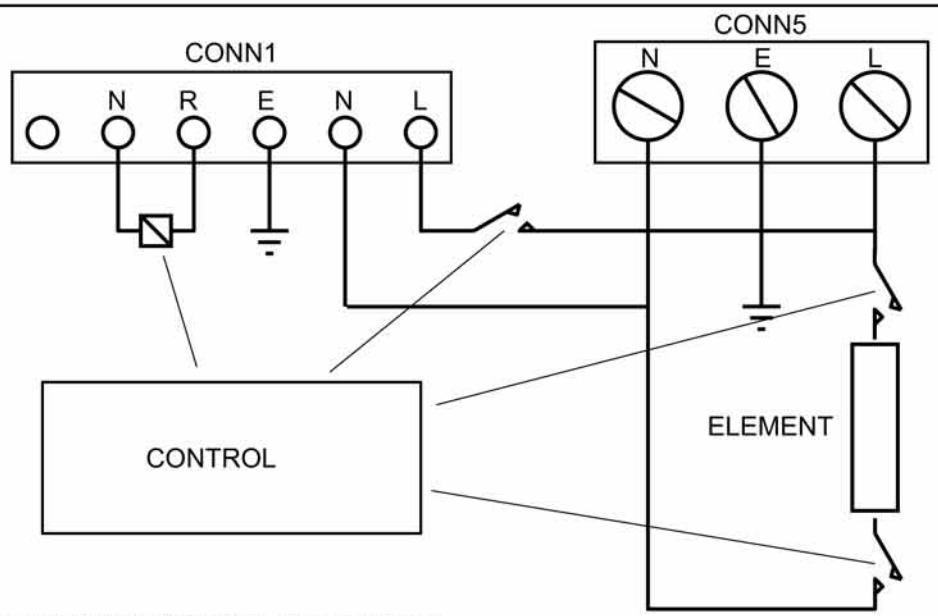

FIGURE FIVE: BOILER INTERNAL SCHEMATIC

For latest prices and delivery to your door visit MyTub Ltd - www.mytub.co.uk - info@mytub.co.uk 0844 556 1818

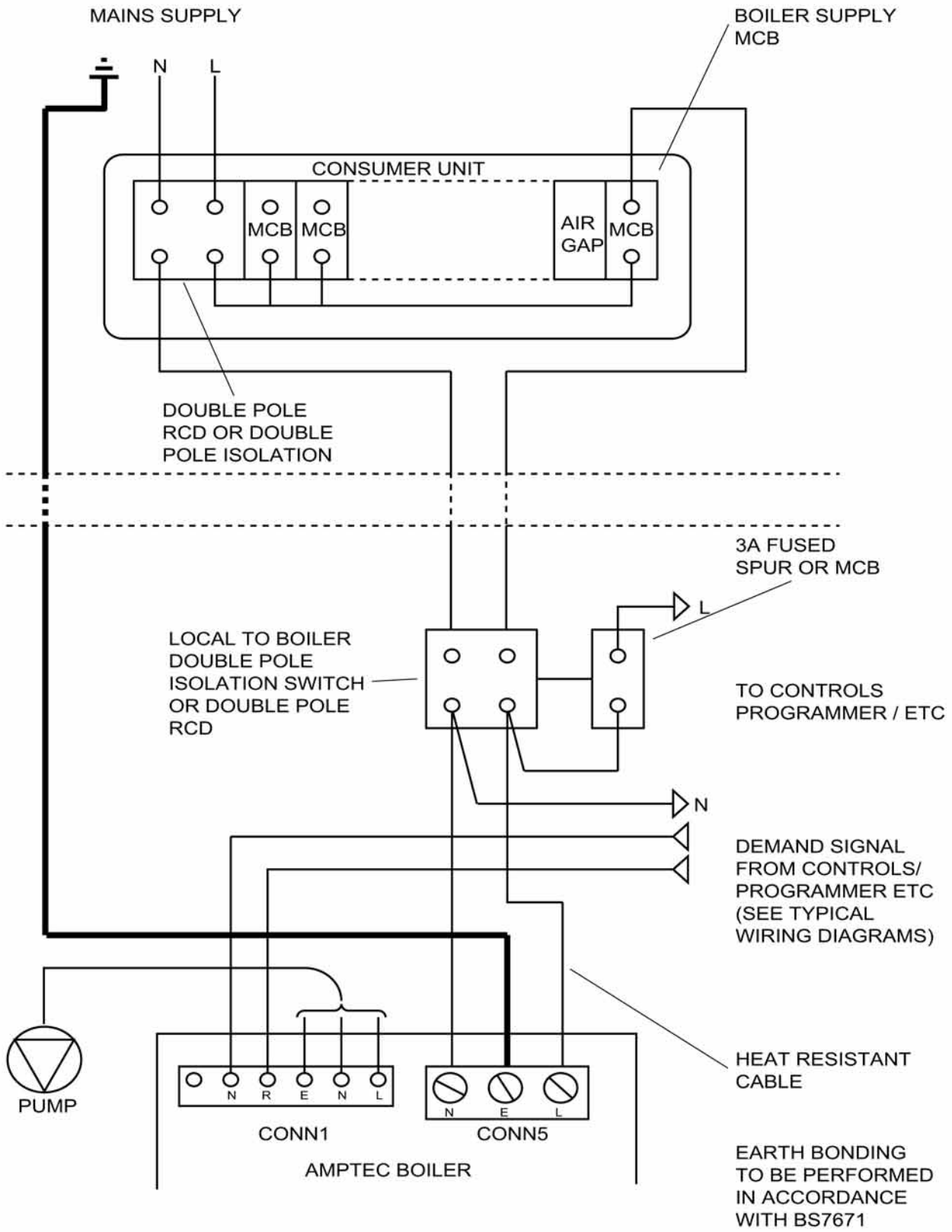

FIGURE SIX: BOILER SUPPLY USING EXISTING CONSUMER UNIT

For latest prices and delivery to your door visit MyTub Ltd - www.mytub.co.uk - info@mytub.co.uk 0844 556 1818

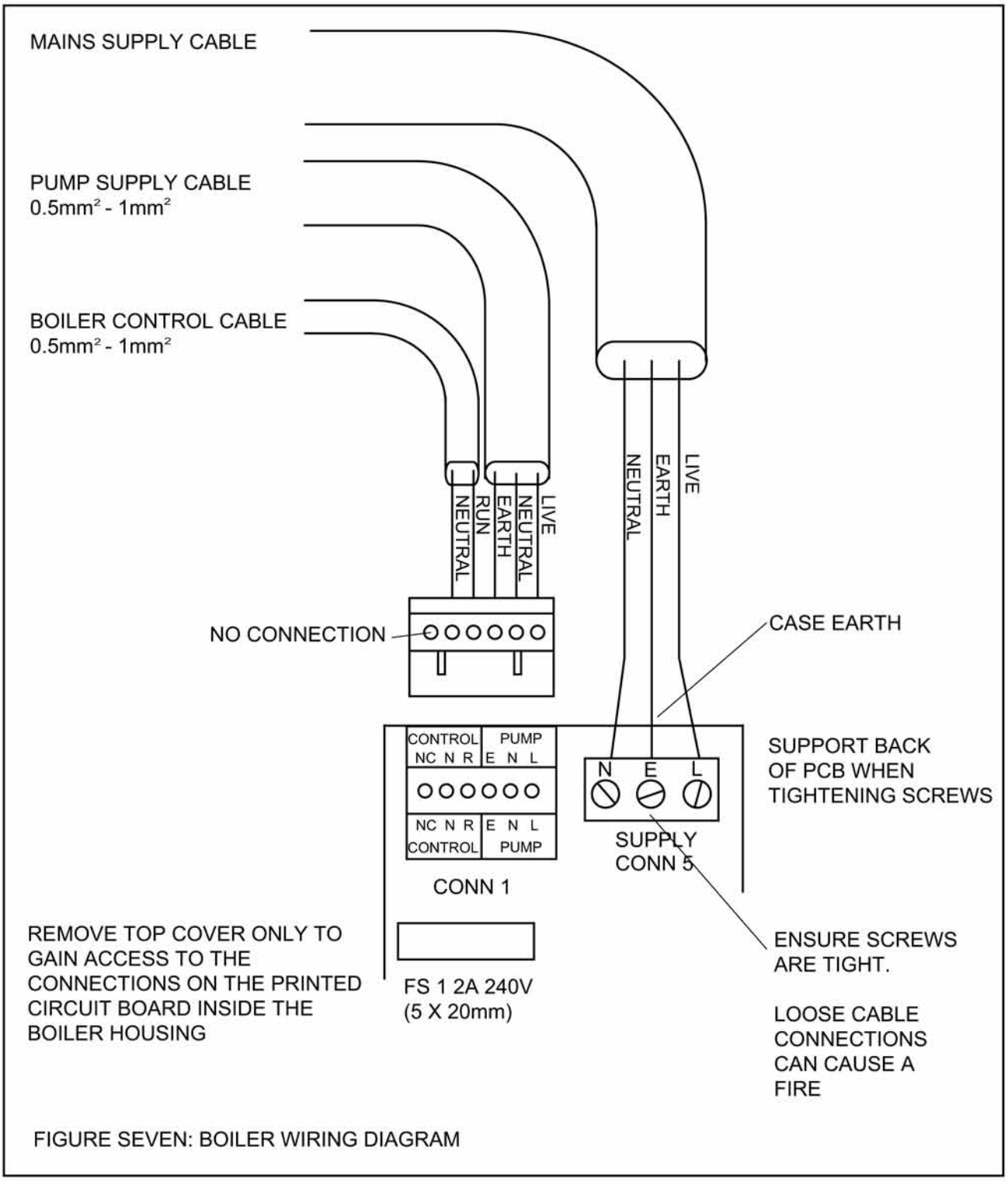

FIGURE SEVEN: BOILER WIRING DIAGRAM

For latest prices and delivery to your door visit MyTub Ltd - www.mytub.co.uk - info@mytub.co.uk 0844 556 1818

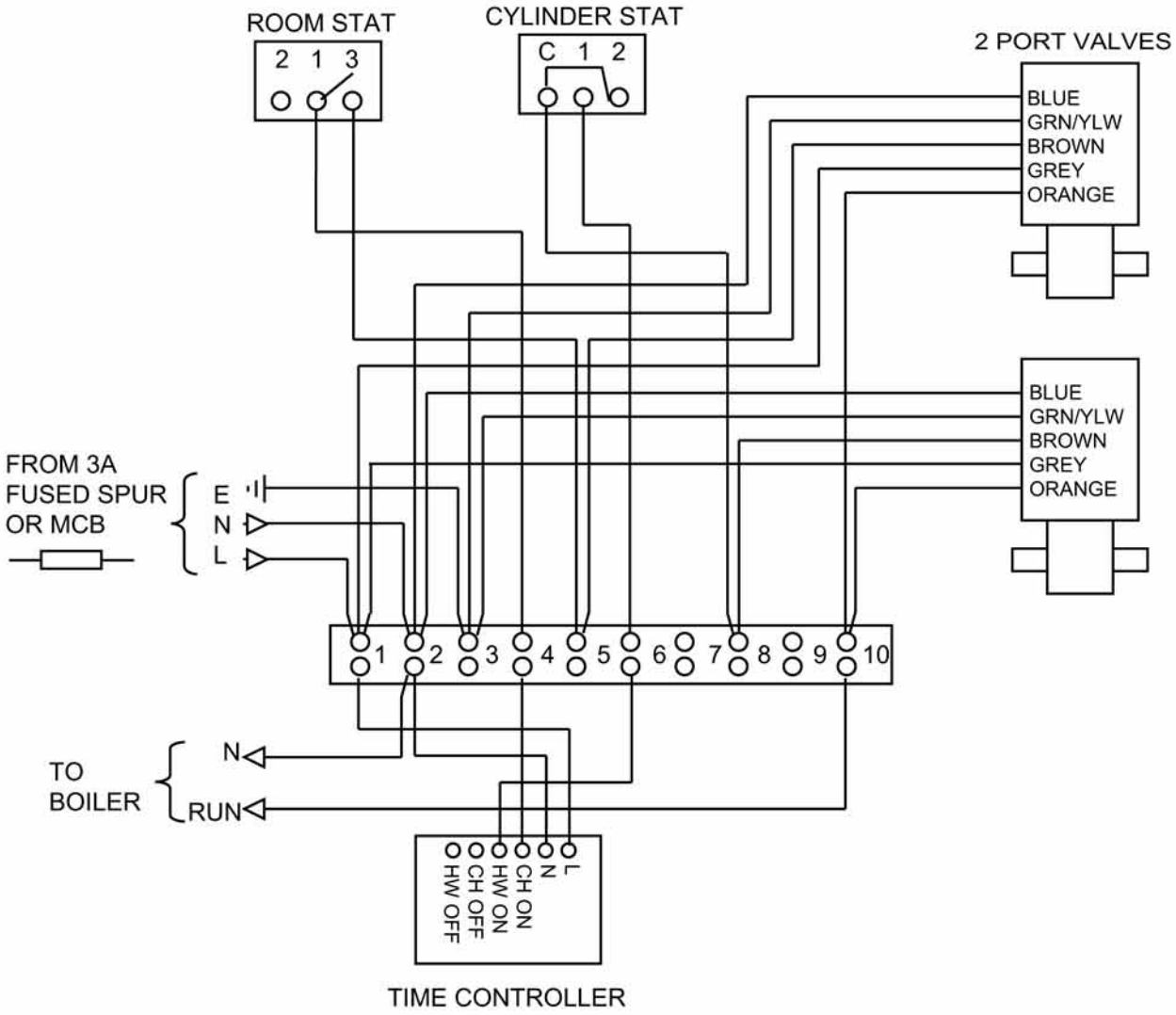

FIGURE EIGHT: TYPICAL S PLAN WIRING DIAGRAM

For latest prices and delivery to your door visit MyTub Ltd - www.mytub.co.uk - info@mytub.co.uk 0844 556 1818

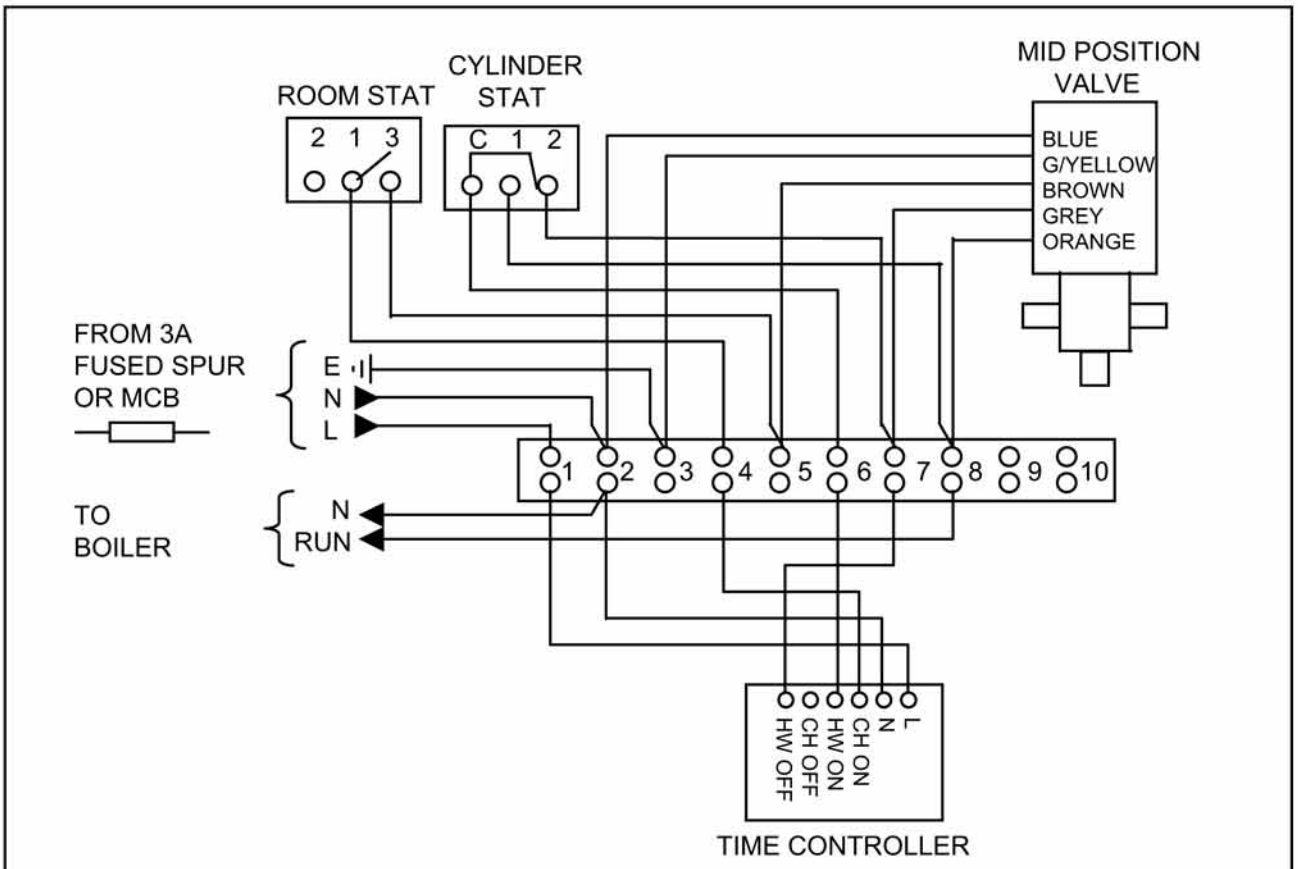

FIGURE NINE: TYPICAL Y PLAN WIRING DIAGRAM

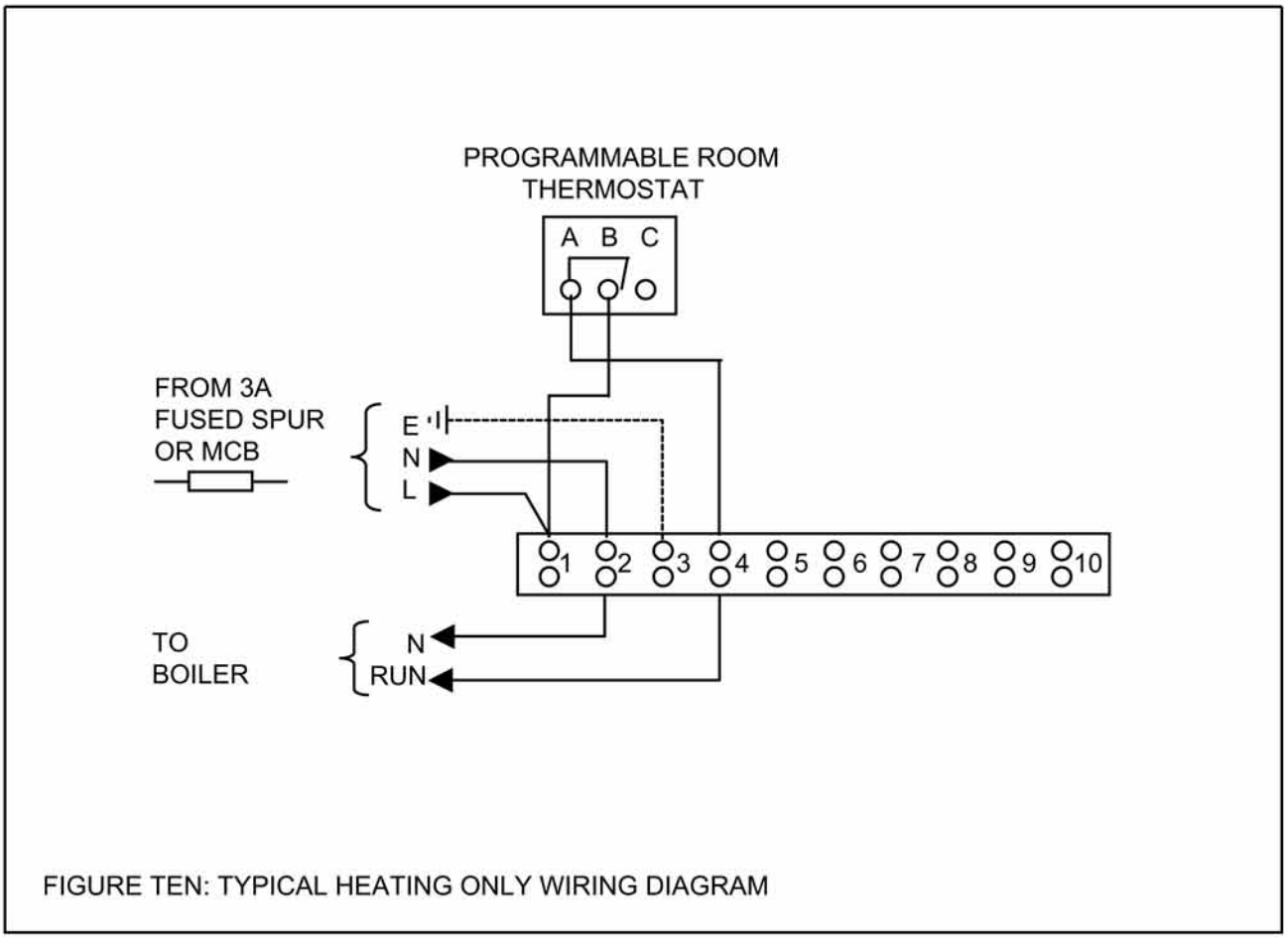

FIGURE TEN: TYPICAL HEATING ONLY WIRING DIAGRAM

For latest prices and delivery to your door visit MyTub Ltd - www.mytub.co.uk - info@mytub.co.uk 0844 556 1818

INSTALLATION - REVISED BUILDING REGULATIONS

Heating Controls To Comply With The Revised Building Regulations (Part L For England. Part J for Scotland).

New Dwelling

1. The installation must be a fully pumped system.
2. Independent temperature and time controls for both heating and domestic hot water.
3. Controls to interlock with the boiler. TRV's alone do not comply.
4. An automatic bypass must be used if a bypass is required. Gate-valves do not comply.
5. Split heating circuits into zones: -
    a. Room thermostat or programmable room thermostats in all zones.
    b. A room thermostat or programmable room thermostats in the main zone and TRV's in all other zones.
6. Cylinder thermostat and zone valve to control stored hot water. Non-electric hot water controllers do not comply.
7. Timed controller for heating and hot water must be provided.
8. A minimum of 2 zones for heating floor spaces greater than 150m^2.
9. Boiler management control systems meeting specific zoning, timing and temperature requirements are acceptable.

Existing Dwellings

When a new installation is fitted, the controls must be as for a new dwelling.

When replacing the boiler and/or hot water vessel, the opportunity to improve the controls should be considered to be confident that the requirements of the Building Regulations are met.

For latest prices and delivery to your door visit MyTub Ltd - www.mytub.co.uk - info@mytub.co.uk 0844 556 1818

COMMISSIONING

The boiler controls are fully automatic, making the operation very simple.

Only after the system has been flushed through and then filled with water, inhibitor and set to the correct pressure (sealed systems), can the electrical supply be switched on.

Check 1. When filling the system check for leaks. The warranty will be invalidated if water leaks into the boiler. Ensure the joints above the boiler are sound.

Check 2. Before switching on the mains supply, check the main electrical power connections are tight. Support the back of the PCB behind the power terminals when tightening the main power terminals. Loose connections can cause a fire.

Initial set up procedure: -

1. Ensure the main electrical supply and the programmer controls to the boiler are off and isolated.

2. Remove the pump live and neutral connection from the control terminal block in the boiler, and reconnect the pump live wire into the control terminal 'R' together with the control signal wire. Connect the pump neutral wire into the control terminal 'N' together with the control neutral wire.

3. Unplug the control block from the main PCB, ensure it is safe and not touching anything. The pump is now fed from the control signal.

4. Check all air is purged from the system, and set the pump to maximum.

5. Switch on the control supply only (3 amp or 6 amp) MCB.

6. With the programmer and room thermostat on, check the pump is running and water is flowing. Ensure the whole system, valves etc. are operating correctly. Continue to run the pump for some time to purge any air. Don't forget to bleed the pump.

7. Switch off the main supply RCD and MCB's. Ensure it is all safe before reconnecting the pump connections to the pump terminals as was originally wired. Reconnect the control terminal block onto the PCB. Check all connections are made correctly, check the main supply terminals in the boiler are tight, close and secure the top front cover of the boiler.

Main test procedure: -

Only after a satisfactory initial test, proceed as follows; -

1. Switch on the main boiler MCB.
   Switch on the programmer "control" (3 amp or 6 amp) MCB.
   Switch on the RCD unit / Isolation switch.
   Check the boiler front panel SUPPLY indicator is illuminated (green).

2. Set the programmer for central heating to ON.
   Set the room thermostat to be ON.
   The boiler front panel CALL indicator will flash (green).
   This indicator will illuminate as a steady green after approximately 2-3 minutes.
   Following the steady green, the HEAT indicator will build up gradually.

3. Check the temperature of the FLOW pipework from the boiler. This pipework should start to rise in temperature. The rate of rise will depend upon the size of the boiler and system.

4. Check the full system operates correctly. If at any time the temperature difference between the boiler return and flow is greater that 14^{0}C, then there is a flow restriction problem, and must be rectified immediately. Set pump speed to give 5-10^{0}C differential between return and flow on the boiler when operating at maximum power output.

For latest prices and delivery to your door visit MyTub Ltd - www.mytub.co.uk - info@mytub.co.uk 0844 556 1818

5. The pump is operated from the boiler control. It should be connected to the pump terminals on the boiler control board. The pump will run whenever the CALL indicator is illuminated (green) either flashing or steady, and it will also continue to run if the boiler is hot, even after the demand has ceased. It will turn off the pump when the boiler temperature falls below approximately 75°C. It will also turn the pump back on if the water temperature rises above 75°C again. A bypass must be incorporated in systems where the heating load can shut down, i.e. when valves or thermostatic radiator valves are fitted. See note on the bypass (page 5).

6. The ALARM indicator flashing (red) will only illuminate if there is a problem. If there is a water problem the HEAT and the CALL (green) indicators will turn off. The boiler will remain in this tripped state until the fault is corrected and the boiler is re-set.

7. An ALARM indicator flashing(red) together with the CALL indicator (red) indicates an over temperature problem.

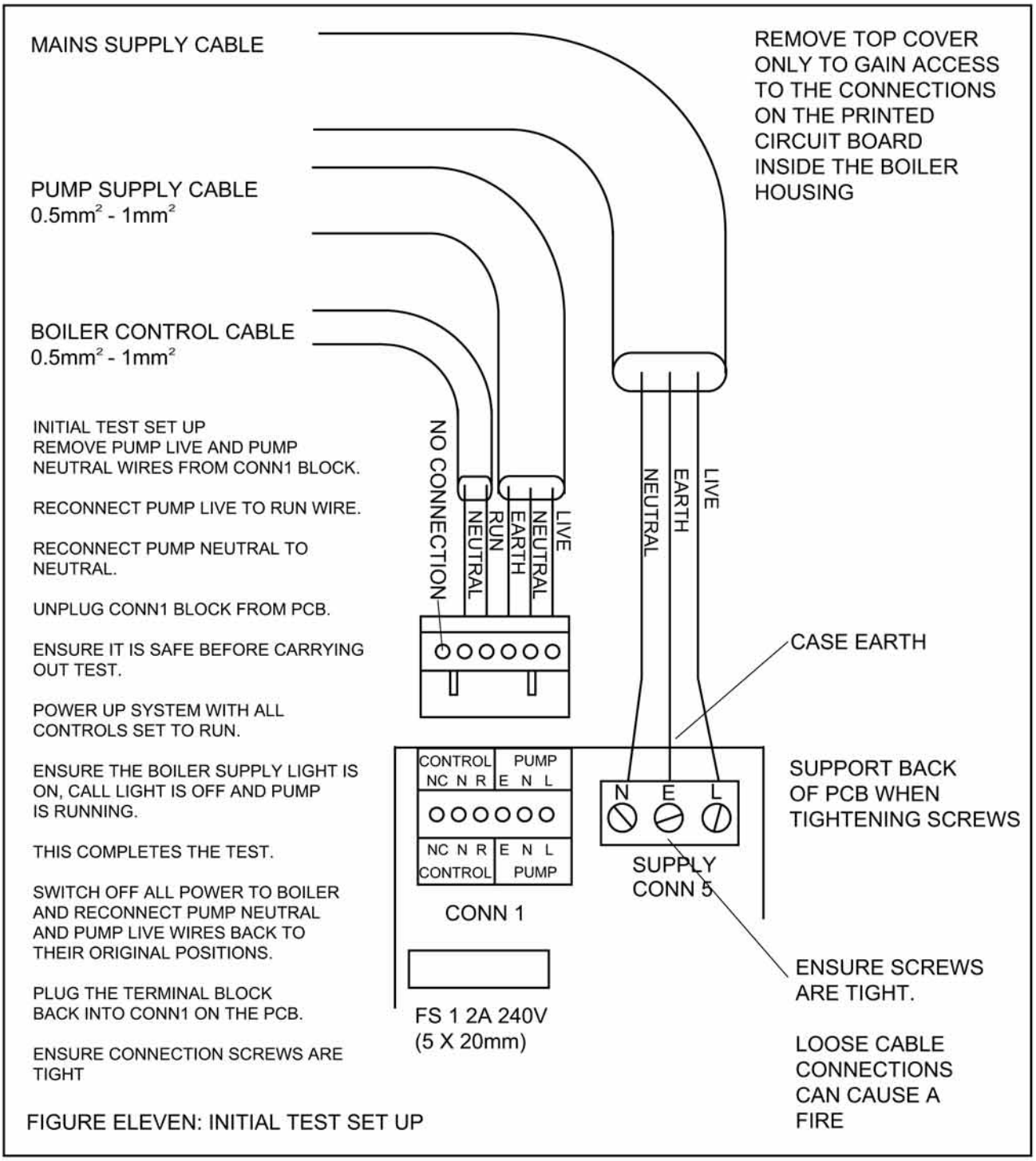

FIGURE ELEVEN: INITIAL TEST SET UP

For latest prices and delivery to your door visit MyTub Ltd - www.mytub.co.uk - info@mytub.co.uk 0844 556 1818

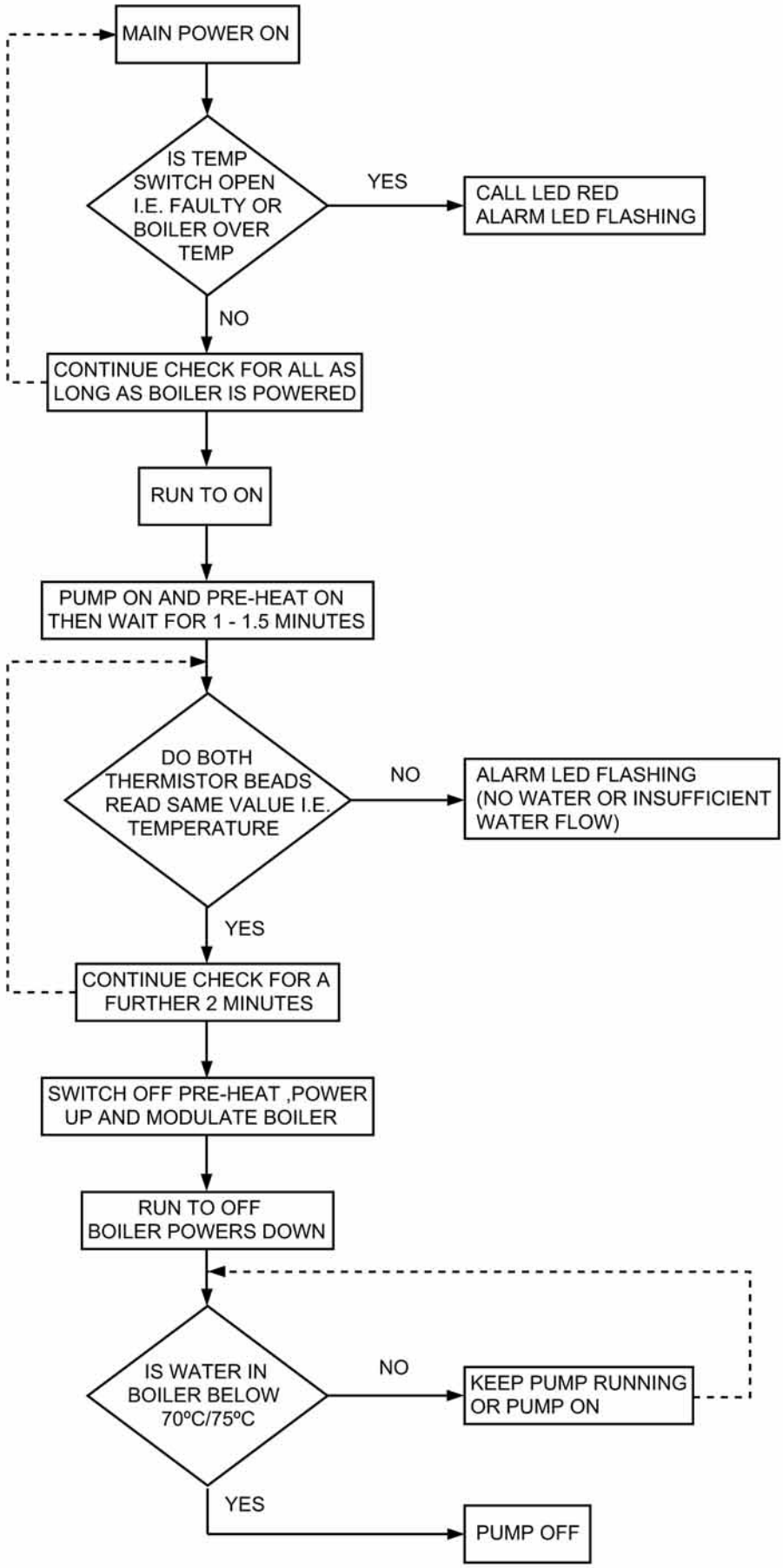

FIGURE TWELVE: OPERATION OF THE C SERIES ISSUE 5 BOILER

For latest prices and delivery to your door visit MyTub Ltd - www.mytub.co.uk - info@mytub.co.uk 0844 556 1818

OPERATION AND INDICATORS

The SUPPLY indicator (green) will remain illuminated all the time the supply is present to the boiler.

The CALL indicator will illuminate (green) on demand from the programmer and thermostats or (red) for an alarm overheat condition. It will flash (green) for 2 to 3 minutes during which it carries out self-tests before allowing the boiler to produce heat. At the end of this period it will remain on steady (green), until the heating demand is satisfied.

The HEAT indicator will illuminate when the boiler actually produces heat, this is only when the CALL indicator (green) is steady. The gradual build up in heating power of the boiler can be seen on the front panel. The HEAT indicator also shows the boiler modulating when it reaches operating temperature.

The ALARM indicator flashing (red) will only illuminate if there is a problem. The HEAT and the CALL (green) indicators will turn off. The boiler will remain in this tripped state until it is re-set. To reset an ALARM follow the 'Alarm Reset' procedure.

TEMPERATURE CONTROL. The boiler output temperature can be adjusted from the front panel. Minimum setting for C series is approximately 65^{0}C and U series 30^{0}C. Maximum setting for C series is approximately 80^{0}C and U series is 60^{0}C.

CLEANING
Use only a damp cloth and mild detergent to clean the boiler outer casing. Do not use abrasive cleaners. Do not allow water inside the boiler. Do not immerse in water.

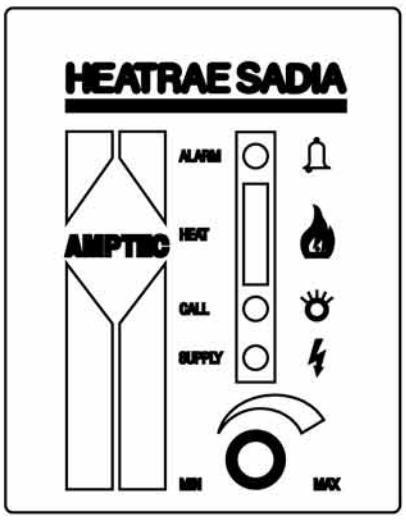

FIGURE THIRTEEN: CONTROL PANEL

SERVICING

IT IS ESSENTIAL THAT THE BOILER IS CHECKED ANNUALLY, Checks must include the electrical connections and inhibitor concentration.

Before any servicing or maintenance is carried out on the system, ensure that the electrical supply has been disconnected first. Care must also be taken as the water may be scalding hot and at a high pressure.

Check the main electrical power connections are tight. Loose connections can cause a fire.

Part Locations and comments (see page 2)

Fuse FS1 is found near the top of the main power PCB assembly.

The temperature switch connected to Conn 3 is situated on the body of the boiler approximately 1/3rd of the distance up from the bottom between insulation and boiler.

The thermistor assembly plugs into the main power PCB assembly through Conn 4, and is clamped at the top of the boiler. Care must be taken not to break the fine wires.

The control PCB assembly is mounted on the back of the bottom front panel, and plugged into the main power PCB Conn 2. Great care must be taken when changing this board assembly not to damage any of the components, especially those adjacent to the mountings.

To change the main power PCB, follow 'Replacing the Main Power PCB' procedure (see page 20).

Each of the main electrical elements should have a resistance of approximately 19 ohms terminal to terminal, (red to red, yellow to yellow, blue to blue and black to black) and an insulation resistance greater than 2 Meg ohms between terminal and case. If the elements are open circuit terminal to terminal, or have short circuit insulation resistance terminal to case, then the boiler must be replaced.

For latest prices and delivery to your door visit MyTub Ltd - www.mytub.co.uk - info@mytub.co.uk 0844 556 1818

REPLACING THE MAIN POWER PCB

Note. Before any maintenance is carried out on the system, ensure that the electrical supply has been disconnected first. Care must be taken as the water may be scalding hot and at high pressure.

Maintenance on the boiler can only be carried out by a qualified and competent tradesman in accordance with supplied instructions.

Removal of the Main Power PCB

1 Switch OFF electrical supplies to the boiler. Both Main, "Live and Neutral", and Control "R and N" must be isolated
2 Remove the front top panel.
3 Disconnect the control PCB and carefully remove the high temperature insulation and the front bottom panel.
4 Unplug the control connector (Conn1), the temperature switch connector (Conn3), and the thermistor connector (Conn4).
5 Unplug the power connectors on the elements.
6 Disconnect the main power cable to Conn5.
7 Remove the 4 screws identified by the black triangles, see figure fourteen below.
8 Carefully remove the PCB assembly from the pipework. This may be stiff and gentle prising at the top may be required.

Replacing the Main Power PCB

1 Ensure heat sink compound is used on the heat sinks.
2 Identify and plug the power connectors onto the elements, colour for colour, as it is easier to make these connections before fitting the PCB.
3 Holding the back plate line up the pillars with the PCB and position it onto the pipework.
4 Loosely add the 4 fixing screws.
5 Tighten up these screws in the order shown below in figure fourteen. It is important to ensure that the PCB assembly is tight on the pipework.
6 Reconnect the control PCB and replace the high temperature insulation.
7 Ensure the main power connections are tight. Loose connections can cause a fire.

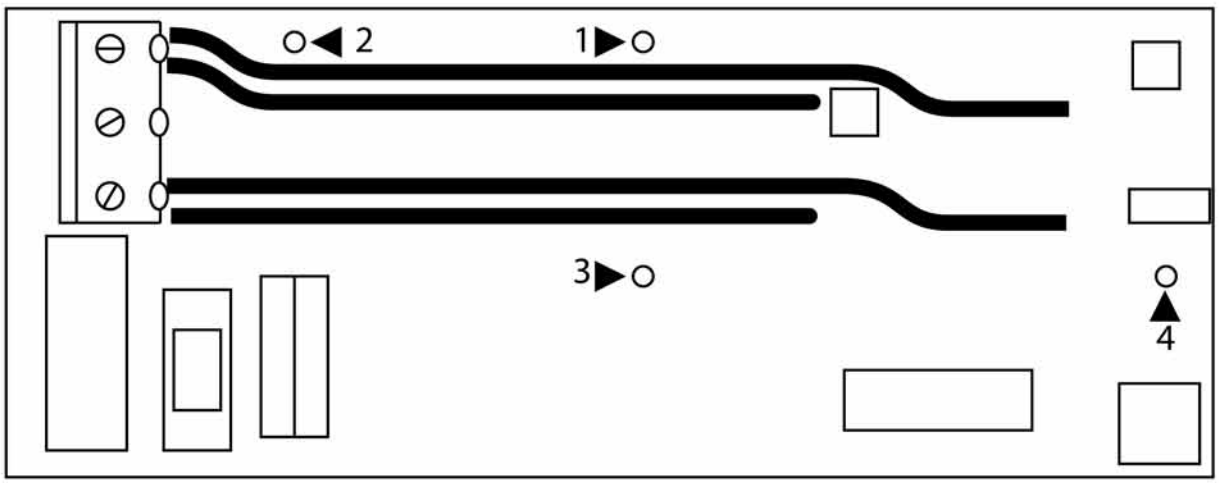

FIGURE FOURTEEN: MAIN POWER PCB

For latest prices and delivery to your door visit MyTub Ltd - www.mytub.co.uk - info@mytub.co.uk 0844 556 1818

FAULT FINDING

1 Should the ALARM indicator illuminate 'flashing' (red) instantly on power up, then the connections 'Conn 4'have become loose or disconnected in transit or if the ALARM indicator is 'flashing' (red) and the CALL indicator is (red), then 'Conn 3' or the thermostatic switch wires have become loose.

2 Should the ALARM indicator illuminate 'flashing' (red) during the call checking period then there is a problem due to lack of water or air in the system.

3 Should the ALARM indicator illuminate 'flashing' (red) and the CALL light show (red) after heat is applied then there is a problem due to lack of water flow. See Fault Finding chart.

NOTE: It may be necessary to fit a capacitor between the 'R' run and 'N' neutral terminals on the control connector to prevent the boiler continuing to run when the cylinder and the room thermostats are satisfied. This is due to a leakage current from some manufacturers 3 port valves. The capacitor required is 0.47 micro-farads suitable for 275 volts AC (X2 style). These capacitors are available from Heatrae Sadia 95 612 708.

ALARM RESET

There are 3 steps to re-set a tripped condition: -

1 Switch "OFF" the electrical supply.

2 Correct the fault, check the system is full of water and set to the correct pressure (sealed systems) and there is a good flow of water (i.e. all the valves are open).

3 Switch the supply back "ON".

Ensure the customer fully understands the operation of the system.

The Boiler must NOT be operated if it is known to have a fault. Switch off, and call a service engineer.

For latest prices and delivery to your door visit MyTub Ltd - www.mytub.co.uk - info@mytub.co.uk 0844 556 1818

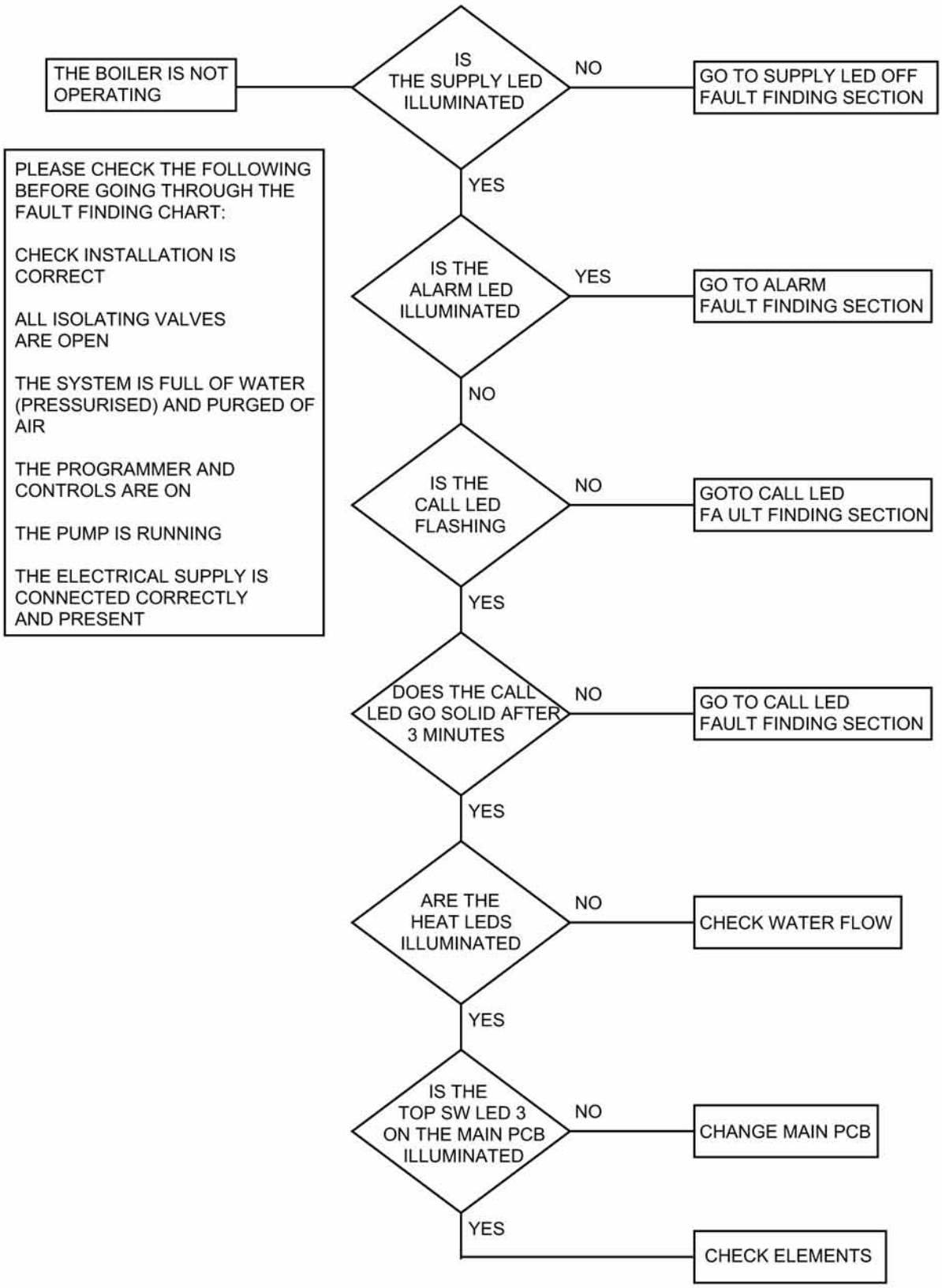

FIGURE FIFTEEN: FAULT FINDING CHART

For latest prices and delivery to your door visit MyTub Ltd - www.mytub.co.uk - info@mytub.co.uk 0844 556 1818

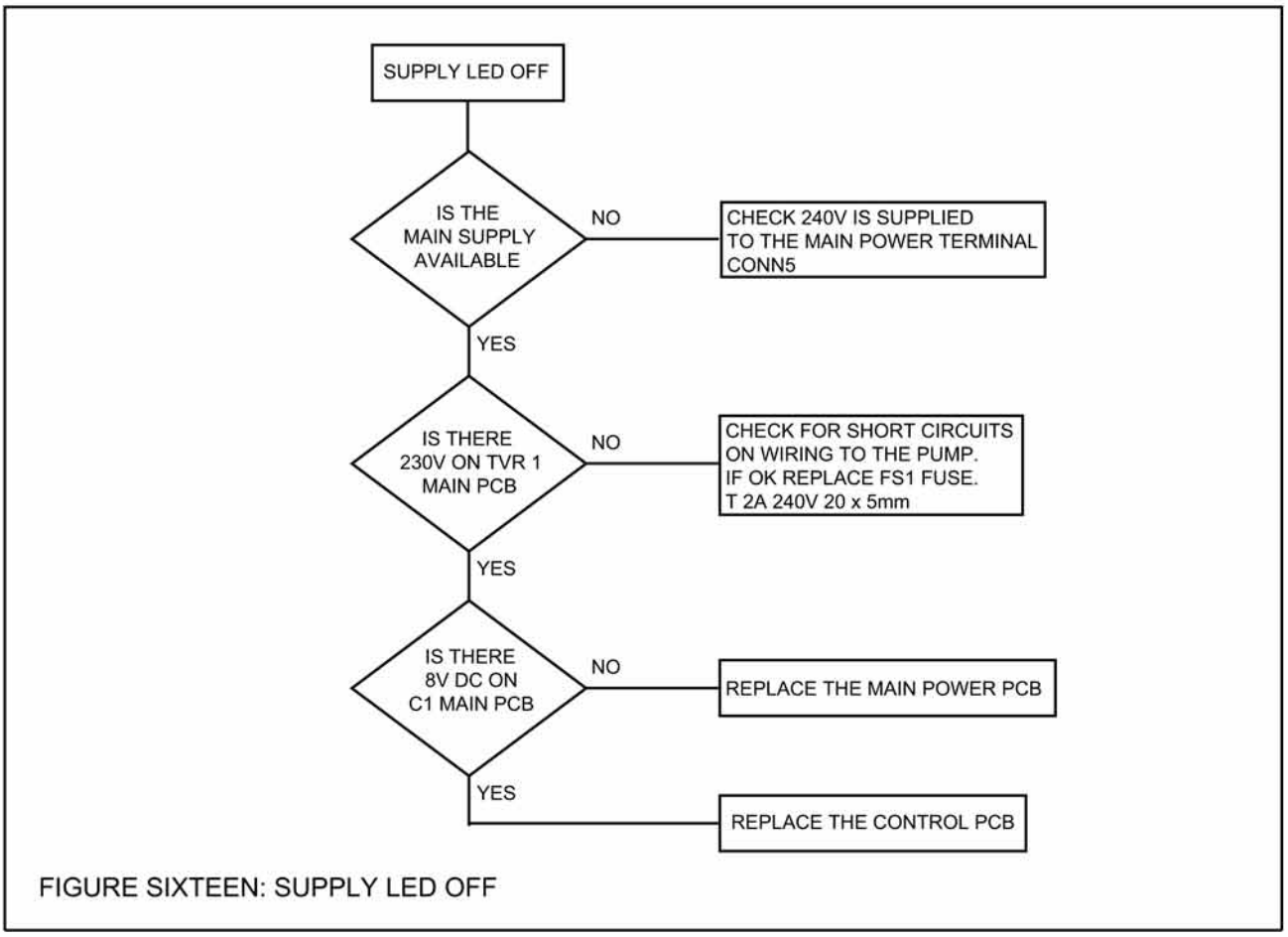

FIGURE SIXTEEN: SUPPLY LED OFF

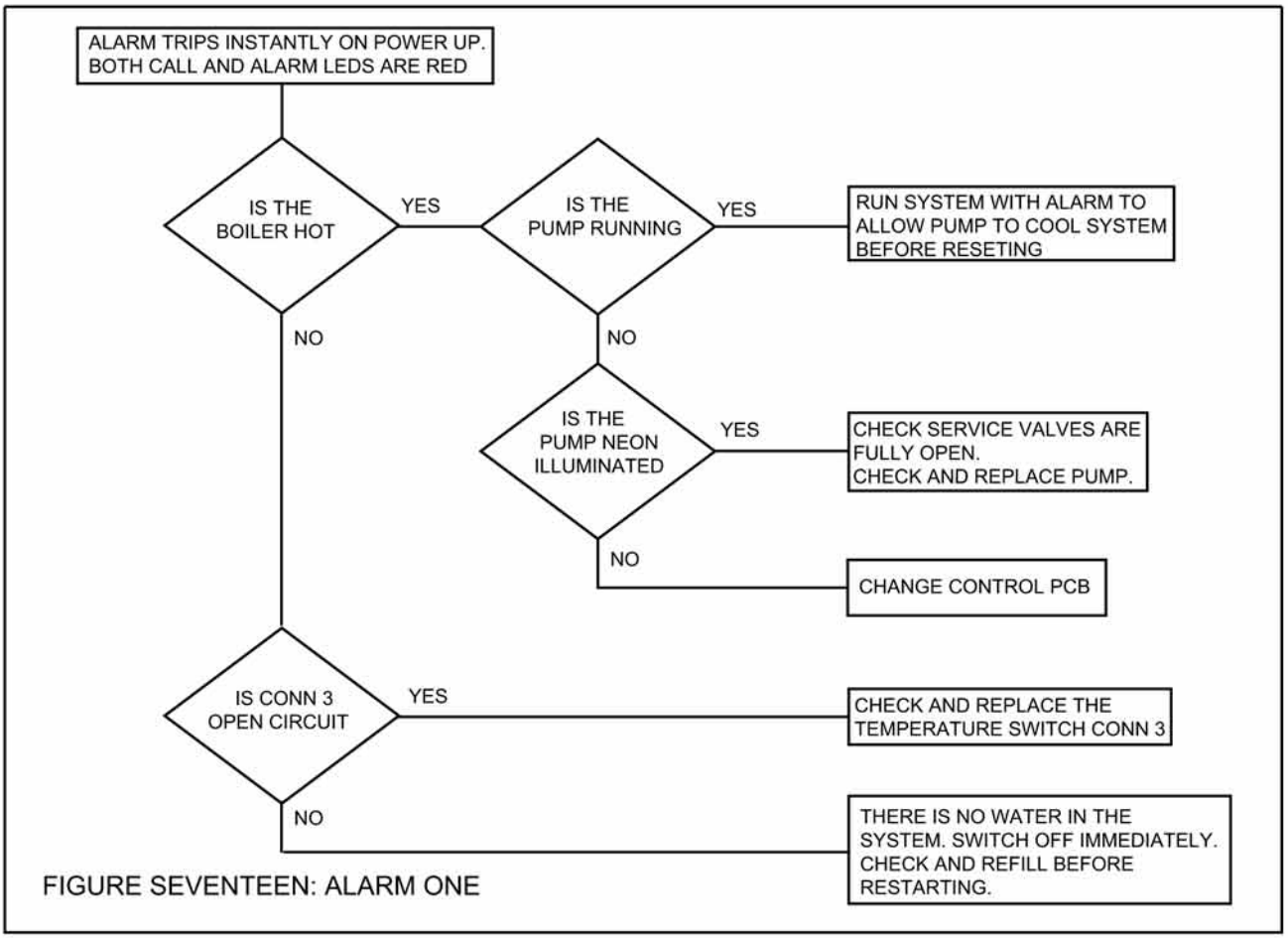

FIGURE SEVENTEEN: ALARM ONE

For latest prices and delivery to your door visit MyTub Ltd - www.mytub.co.uk - info@mytub.co.uk 0844 556 1818

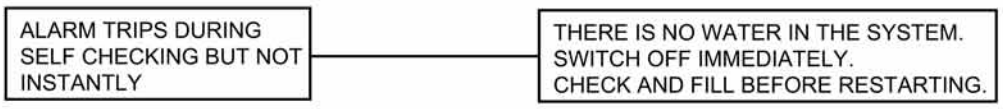

FIGURE EIGHTEEN: ALARM TWO

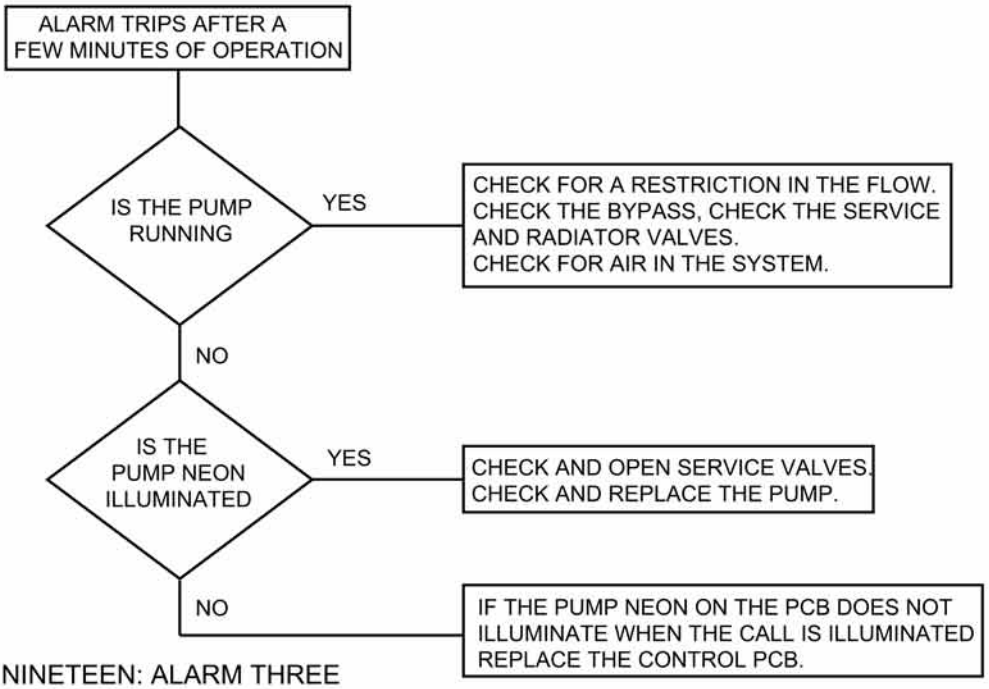

FIGURE NINETEEN: ALARM THREE

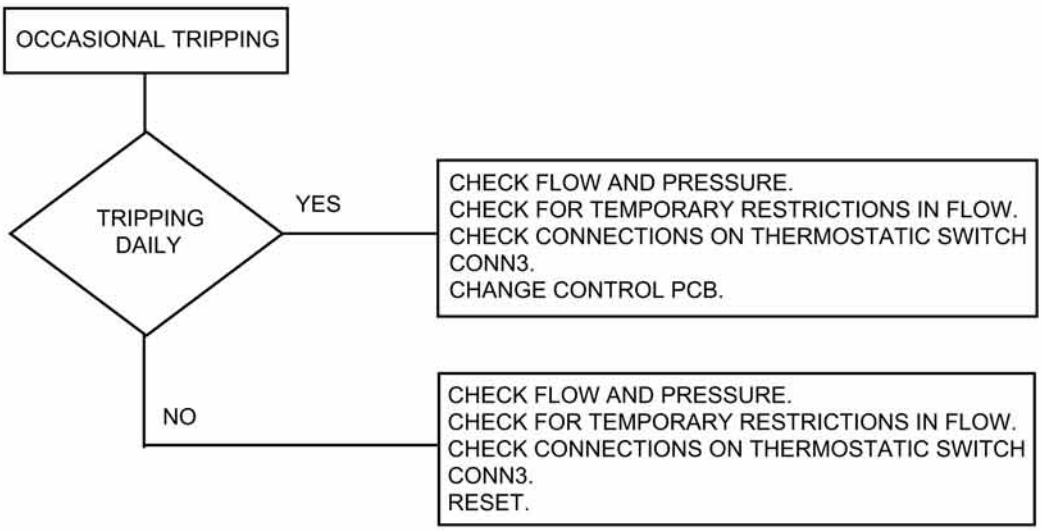

FIGURE TWENTY: ALARM FOUR

For latest prices and delivery to your door visit MyTub Ltd - www.mytub.co.uk - info@mytub.co.uk 0844 556 1818

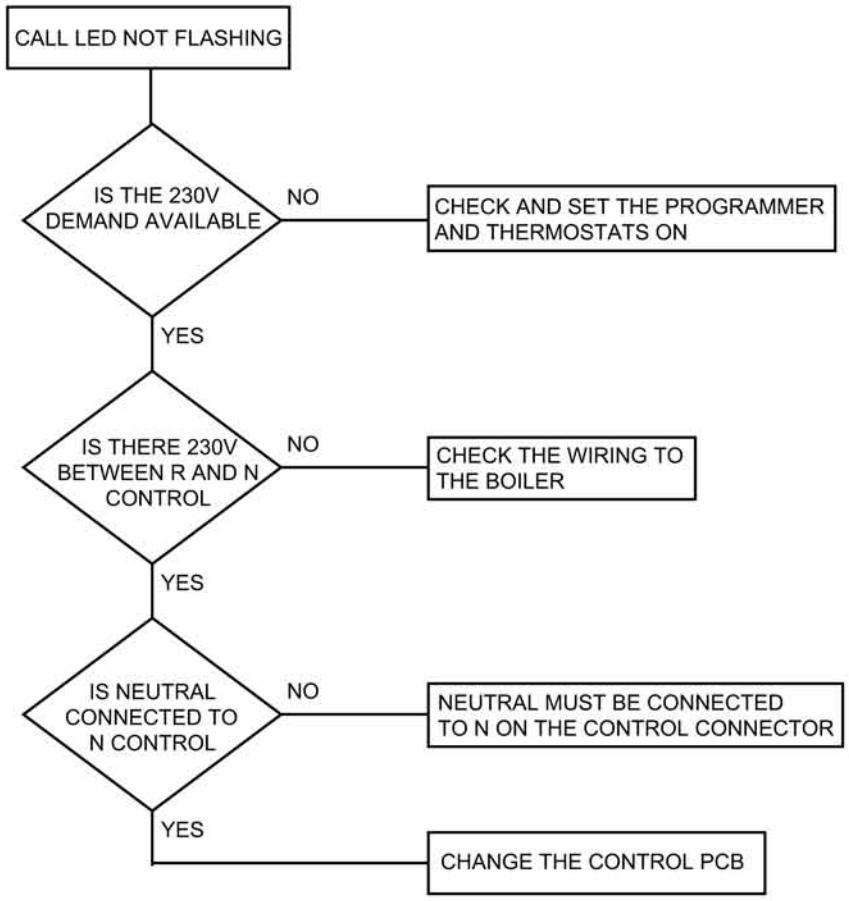

FIGURE TWENTY ONE: CALL LED NOT FLASHING

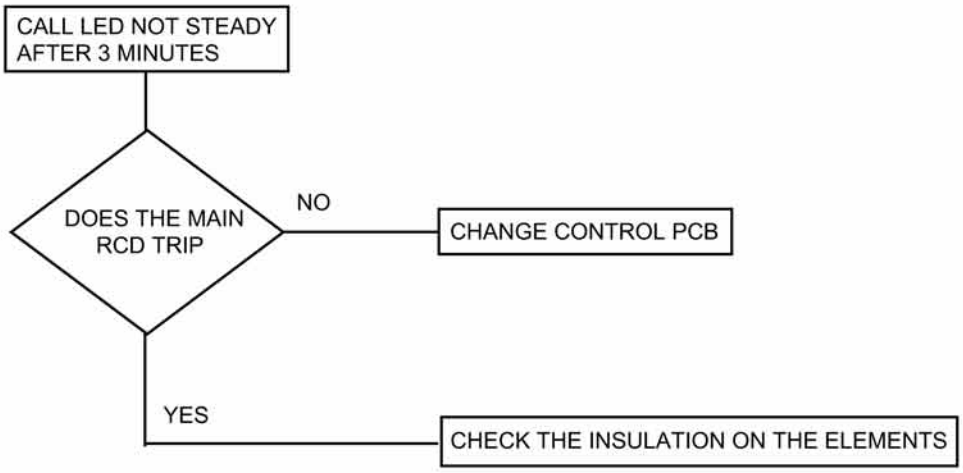

FIGURE TWENTY TWO: CALL LED NOT STEADY

For latest prices and delivery to your door visit MyTub Ltd - www.mytub.co.uk - info@mytub.co.uk 0844 556 1818

PUMP - RELAY CONTROL FOR AMPTEC BOILERS

2 or 3 boilers on single phase 240V or three phase 415V supply

Isolation relays must be used as shown in figure twenty three below for 2 or more boilers to operate the pump. Boilers can be connected on a single phase 240V supply or on separate phases of a 415V supply.

Relay specification:	Coil	240V 50 Hz
	Contacts	240V 10Amps N/O (Normally Open)
	Isolation	Coil to Contact - 415V minimum working.
	Capacitor	4.7uF 240V 50Hz Class X2

For 2 boilers use Heatrae Sadia Part Number 95 970 135

For 3 boilers use Heatrae Sadia Part Number 95 970 136

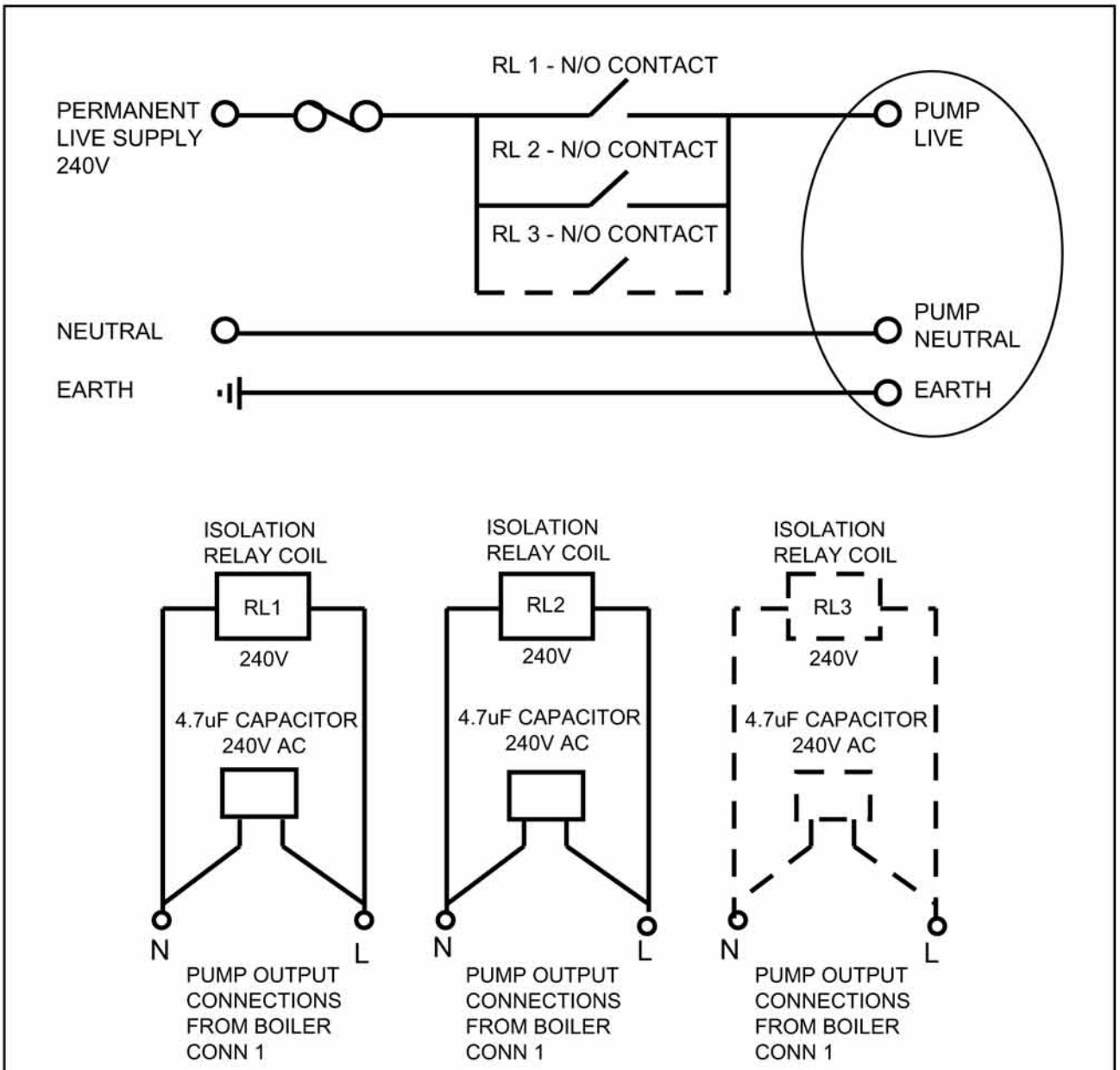

FIGURE TWENTY THREE: PUMP - RELAY CONTROL FOR AMPTEC BOILERS

For latest prices and delivery to your door visit MyTub Ltd - www.mytub.co.uk - info@mytub.co.uk 0844 556 1818

SHOWER – RELAY CONTROL FOR AMPTEC® BOILER.

Limitations on electrical supply

Where there is an electric shower and an electric flow boiler installed, the electrical supply may be overloaded if both units are operating at the same time. To prevent this condition a simple switch over relay box must be added.

Connections: - The coil of the relay is connected across the switched supply to the electric shower. The 'normally closed' contact of the relay is connected into the control line of the electric flow boiler. The relay does not switch the high current to the boiler, only the control signals.

Operation: - When the shower is switched on, the relay is activated breaking the control signal to the boiler, and hence shutting it down in a controlled manner, thereby preventing overload on the mains electrical supply. After showering the boiler will restart.

Electric showers are normally run for short periods at a time, and therefore shutting down the heating during these times should not cause any discomfort.

Note, this is only required if there is doubt with regard to supply limitations, and an electric shower that heats the water at the same time as the Amptec boiler is used. It is not required with power showers, which only pump the water.

A suitable relay unit is available from Heatrae Sadia. Part number 95 970 134. This relay unit is also suitable for other applications where there is a high load demand to be shared with the boiler.

Other relay units containing 2 or 3 relays are also available from Heatrae Sadia.

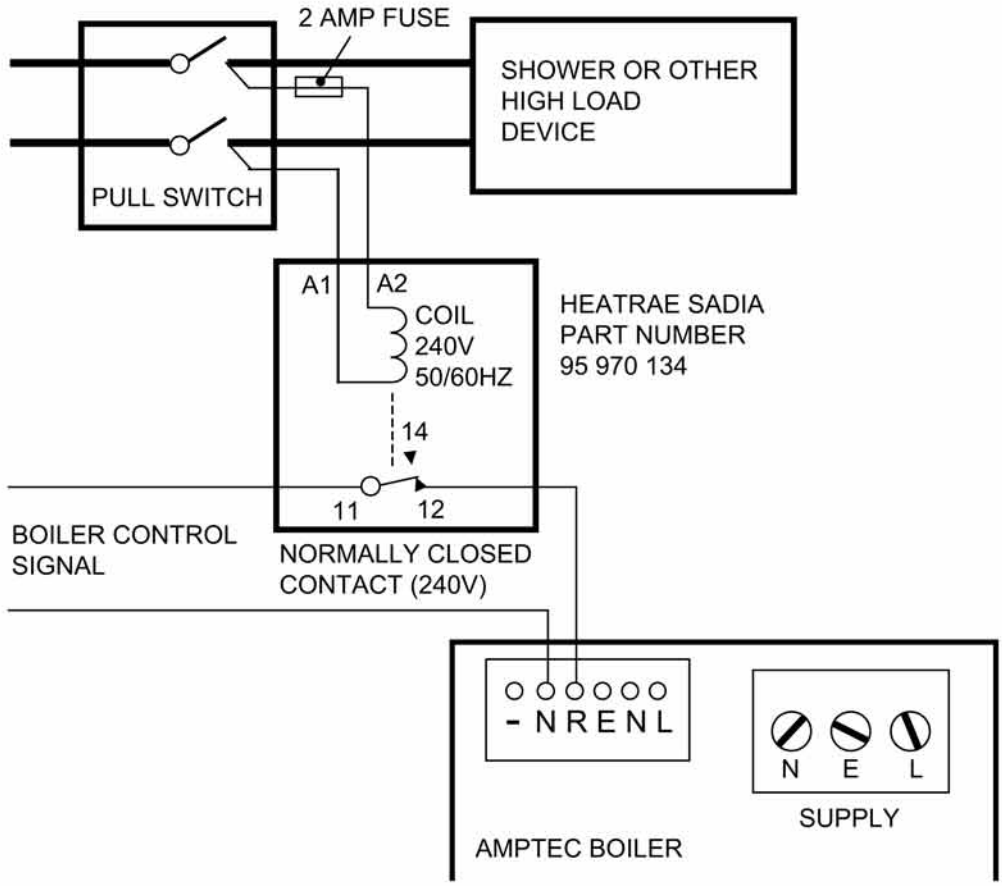

FIGURE TWENTY FOUR: SHOWER RELAY CONTROL

For latest prices and delivery to your door visit MyTub Ltd - www.mytub.co.uk - info@mytub.co.uk 0844 556 1818

GUARANTEE.

This product is guaranteed against faulty materials and manufacture for a period of 2 years from the date of purchase provided that:

1. The unit has been installed in accordance with the Installation and User Instructions and all relevant Codes of Practice and Regulations in force at the time of Installation, and that all necessary controls and safety valves have been fitted correctly.
2. The unit has not been modified or tampered with in any way, and has been regularly maintained as detailed in the Installation and User Instructions.
3. The unit has been used only for domestic heating purposes.

The unit is not guaranteed against damage by frost, and the immersion heater is not guaranteed against excessive scale build-up.

This Guarantee in no way affects the statuory rights of the consumer.

The policy of Heatrae Sadia is one of continuous product development and, as such, we reserve the right to change specifications without notice.

ENVIRONMENTAL INFORMATION.

Heatrae Sadia products are manufactured from many recyclable materials.
At the end of their useful life they should be disposed of at a Local Authority Recycling Centre in order to realise the full environmental benefits.

PARTS LIST

Part Number	Description
95615047	Main Power PCB Assembly
95615046	Control PCB Assembly
95612709	Fuse T 2A 240V
95613628	Temperature Switch
95612706	Thermistor Assembly
95612708	Capacitor 0.4uF
95614290	Front Top Cover Plate

Spares Stockists

Electric Water Heating Co.
2 Horsecroft PLace, Pinnacles, Harlow, Essex, CM19 5BT.
Tel: 0845 0553811
E-mail: sales@ewh.co.uk

Eyre & Elliston
Unit 12, Spitfire Way, Airlinks Industrial Estate, Heston, Middlesex, TW5 9NR.
Tel: 020 8573 0574

Heating Replacement Parts & Controls
PO Box 48, Tomlinson Road, Leyland, Preston, Lancashire, PR5 1JX.
Tel: 01772 819673
www.hrpc.co.uk

Newey & Eyre Specialists Products Division
Please contact your local branch

UK Spares Ltd.
Tower Lane, Warmley, Bristol, BS30 8XT.
Tel: 0117 961 6670

William Wilson Ltd.
94 Kinning Street, Glasgow, G5 8LW.
Tel: 0141 4201661

HEATRAE SADIA
The quality name in water heating

Heatrae Sadia Heating
Hurricane Way Norwich NR6 6EA
www.heatraesadia.com
Heatrae Sadia Heating is a trading name of Baxi Heating UK Limited

Main No:	01603 420100
Main Fax:	01603 420218
Sales:	01603 420110
Sales Fax:	01603 420149
Service:	01603 420330
Service Fax:	01603 420349

36005871 issue 3

For latest prices and delivery to your door visit MyTub Ltd - www.mytub.co.uk - info@mytub.co.uk 0844 556 1818