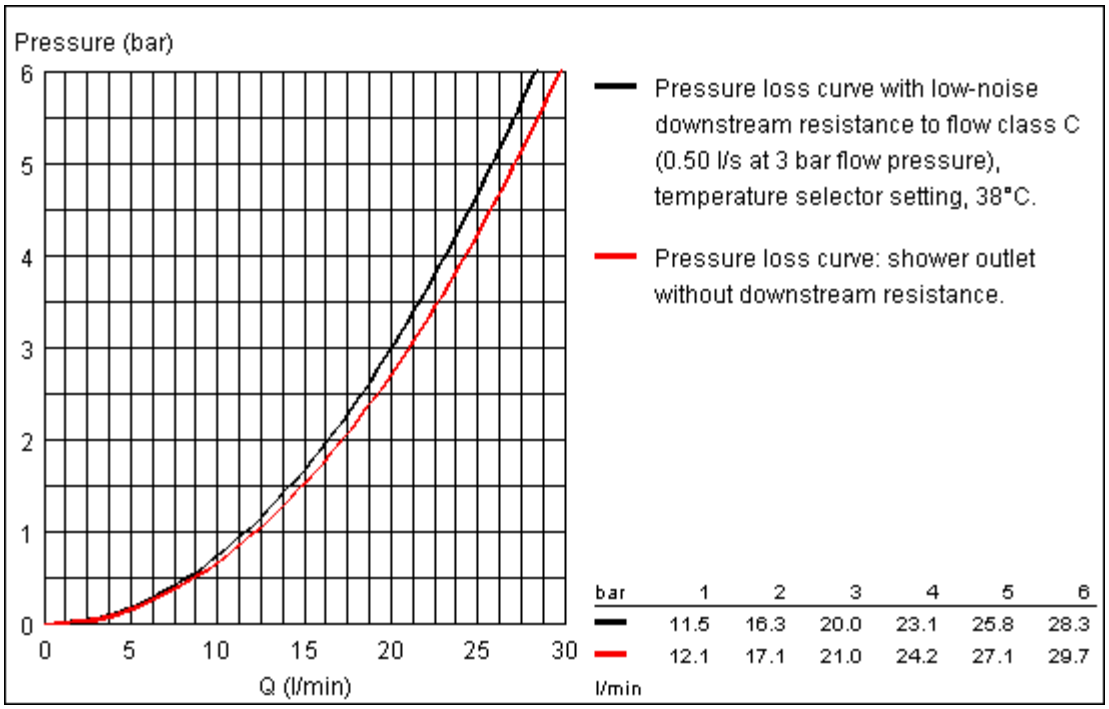

bar	1	2	3	4	5	6
	11.5	16.3	20.0	23.1	25.8	28.3
	12.1	17.1	21.0	24.2	27.1	29.7
l/min						

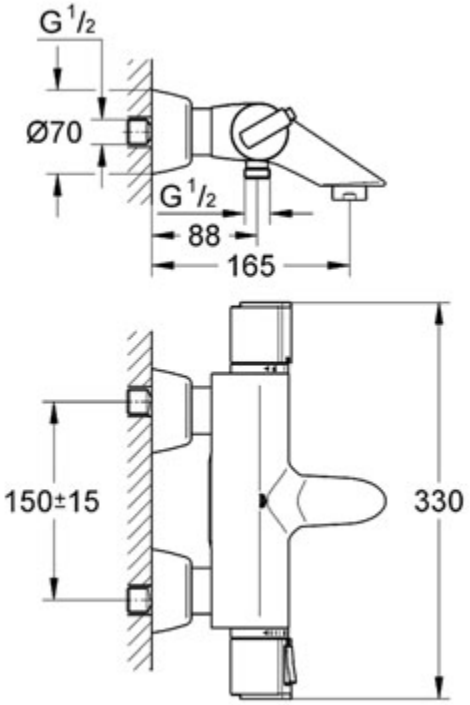
G 1/2
Ø70
G 1/2
88
165
150±15
330

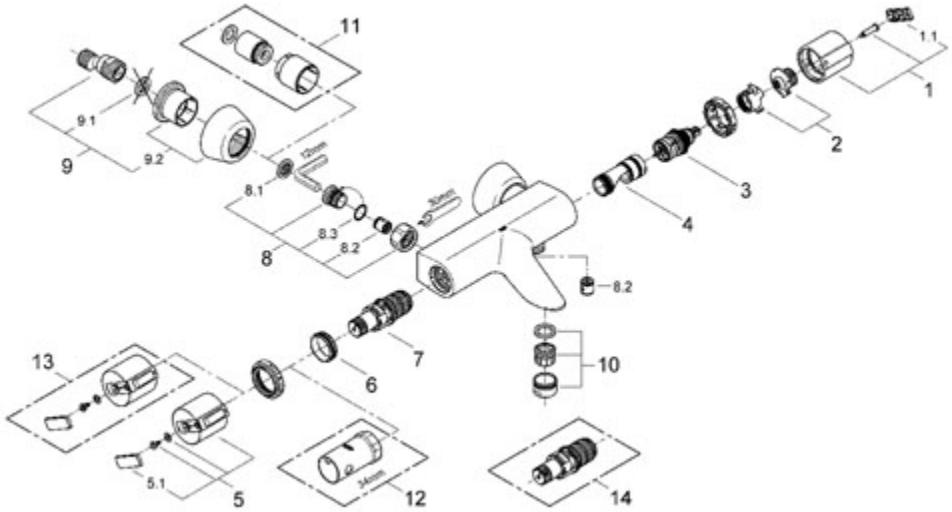

For latest prices and delivery to your door visit MyTub Ltd - www.mytub.co.uk - info@mytub.co.uk 0844 556 1818