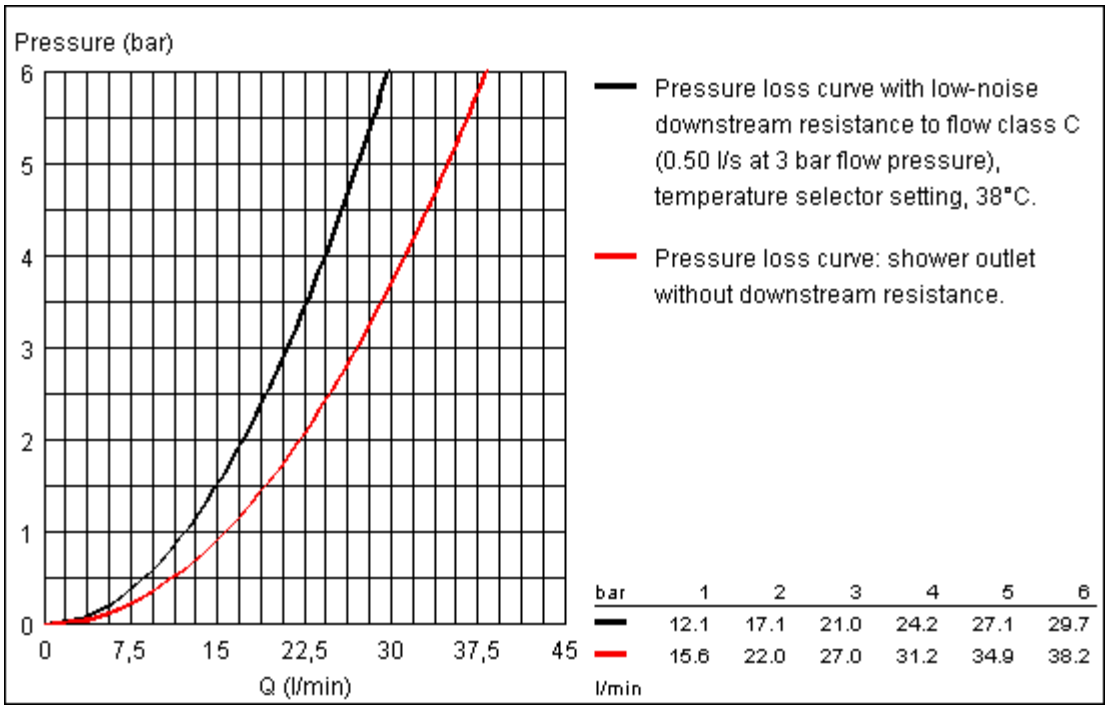

bar	1	2	3	4	5	6
	12.1	17.1	21.0	24.2	27.1	29.7
	15.6	22.0	27.0	31.2	34.9	38.2
l/min						

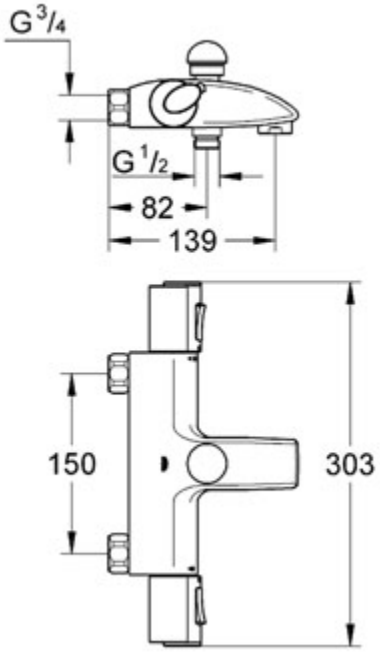
G 3/4
G 1/2
82
139
150
303

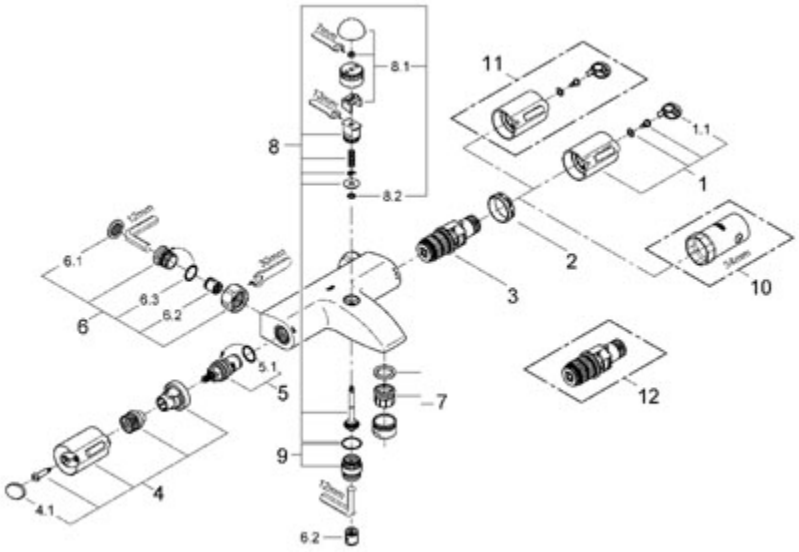

For latest prices and delivery to your door visit MyTub Ltd - www.mytub.co.uk - info@mytub.co.uk 0844 556 1818