Air Conditioning

# Futura Fan Coil Units

ISO 9001 - Cert. n° 0545/2
Unit heaters
Radiant panels
Fan coils
Air handling units
Flues

SABIANA
ENVIRONMENTAL COMFORT

Air Conditioning

SABIANA

ENVIRONMENTAL COMFORT

## CONTENTS



**FuturaSabiana** is the fan coil that continues the Sabiana tradition based on high reliability and low noise levels.
FuturaSabiana is the result of great commitment in terms of energy and resources to offer a more modern product from every point of view:

- **Design:** Sabiana proposes a fan coil with an absolutely innovative design which is a patented decorative model. A fan coil with such developed aesthetics constructed with **continuous and rounded curves** was never been designed before.
  For the first time the Futura fan coil has the casing made almost completely of **plastic**, apart from the front panel. This allows an exceptional and continuous attention to details.
  Even **the controls**, both on board and remote for wall installation, have been completely re-designed to perfectly match the equipment and the surrounding environment.

- **Quietness:** Sabiana exploited all its research and development skills to **reduce the noise level** of this fan coil. This aspect is increasingly important both for designers and end users.
  The result is an extremely low noise level both on the FSC model with centrifugal fan and on the FST model with tangential fan, as proved by the Eurovent certification.

- **Range:** the FuturaSabiana series is absolutely unique: **no other fan coil** comes with such a wide range of models, that includes versions with a centrifugal or tangential fan as well as the “home” series with reduced lenght and depth.
  Moreover, all the Sabiana fan coils can be equipped with the patented **Crystall** electrostatic filter, of electronic type, which offers in a single appliance the functions of air purification and treatment.
  The FuturaSabiana fan coils are available on demand in a wide range of colours and are equipped with every kind of accessoires and controls to meet all electronic and installation needs.

- **Easy use:** every detail has been carefully studied to guarantee **easy** assembly, use and maintenance of the fan coils, like for instance the functional symmetric feet, the wide valve space (170 mm) and easy access to the filter in all models. Moreover each version has **the same internal structure**, identical in both horizontal and vertical models, in order to standardize production and guarantee a greater flexibility in distribution and installation.

## FSC version with centrifugal fan

For its most traditional version, Sabiana focused its attention on design, optimization of practicality as well as on noise level reduction.
This fan coil, based on a traditional technology, offers excellent environmental comfort.

- *7 sizes (300 - 1400 m³/h)*
- *1 battery: 3 or 4 rows*
- *2 batteries: 3 or 4 rows (cooling) and 1 row (heating)*
- *5 versions: (MV, IV, MO, IO, MVB)*

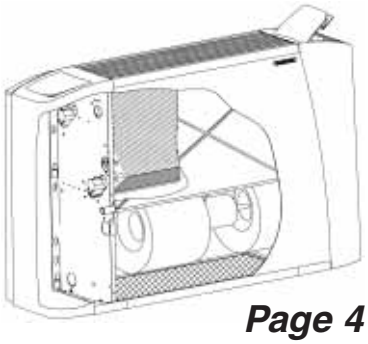

**Page 4**

## FSC version with tangential fan

The series FST is equipped with an exclusive tangential fan assembly which has a 120 mm diameter, the largest one on this kind of unit. Its special spiral shape guarantees a perfect and continuous airflow on the whole battery surface, optimizes thermal exchange and avoids the annoying “pumping” effect of other kinds of tangential fans.
The noise level has been remarkably reduced, as proved by the Eurovent certification.

- *5 sizes (300 - 1000 m³/h)*
- *1 battery: 3 or 4 rows*
- *2 batteries: 3 or 4 rows ( cooling) and 1 row ( heating)*
- *5 versions: (MV, IV, MO, IO, MVB)*

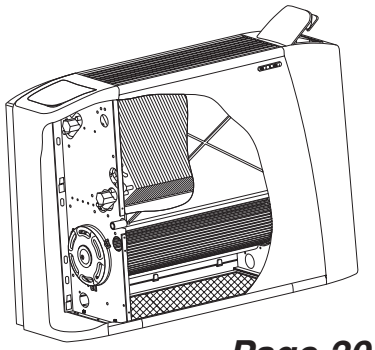

**Page 20**

## FSC home version with tangential fan

The series FSR is designed to be equipped with tangential fan and the units are of smaller dimensions for smaller environments (depth 18 cm).
FuturaSabiana is the ideal equipment for offices and houses, is no longer a simple technical product but also a furnishing element that can give added value to the aesthetics of the surroundings.

- *4 sizes (180 - 500 m³/h)*
- *1 battery: 2 rows*
- *1 version: MV*

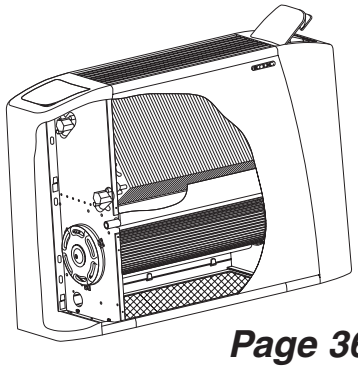

**Page 36**

## Crystal Sabiana electrostatic filter

The Crystall Sabiana electrostatic filter matches the need for better air conditioning with the concepts of space and design. With this filter the various stages of air treatment are combined in one appliance. Thanks to this new patented filter, air pollutants such as cigarette smoke, dust, pollen and most biological organisms are eliminated.
In addition, as fresh air is not being introduced to obtain the best climatic conditions, there are consequential energy savings.

**Page 65**

EUROVENT CERTIFIED PERFORMANCE

Sabiana take part to the Eurovent program of fan coil performance certification.
The official figures are published in the Eurovent web site (**www.eurovent-certification.com**).
The tested performances are:

- Cooling total emission at the following conditions:
  - Water temperature +7°C E.W.T. +12°C L.W.T.
  - Entering air temperature +27°C dry bulb +19°C wet bulb
- Heating emission (2 pipe units) at the following conditions:
  - Entering water temperature +50°C
  - Entering air temperature +20°C
  - Water flow rate as for the cooling conditions
- Cooling sensible emission at the following conditions:
  - Water temperature +7°C E.W.T. +12°C L.W.T.
  - Entering air temperature +27°C dry bulb +19°C wet bulb
- Heating emission (4 pipe units) at the following conditions:
  - Water temperature +70°C E.W.T. +60°C L.W.T.
  - Entering air temperature +20°C
- Fan absorption
- Water pressure drop
- Sound power

# Construction

## Outer casing

Made from strong synthetic lateral corners and from galvanized and prepainted frontal steel sheet.
The plastic top grid has fixed louvres and is reversible in order to distribute the air in two different directions.
**Standard colours:**
- lateral corners and top grid: **Pantone 427C (light grey)**
- frontal sheet: **RAL 9003 (white)**
- other colours on request.

## Inner casing

Made from galvanized steel with closed cell insulation.

## Filter

The filtration medium is a washable synthetic fibre, efficiency of 73% and the filter frame is made of galvanized steel. Special plastic sliding guides allow for easy insertion and removal of the filter.

## Fan assembly

The fans have aluminium blades directly keyed on the motor with double aspiration and they are dinamically and statically balanced during manufacture in order to have an extremely quiet operation.

## Electric motor

The motor is wired for single-phase and has four speeds, three of which are connected.
The motor is fitted on sealed for life bearings and is secured on antivibration and self-lubricating mountings.
Protection IP 21, class B.

## Heat exchanger

It is manufactured from drawn copper tube and the aluminium fins are mechanically bonded onto the tube by an expansion process. The coil has two $^1/_2$ inch BSP internal connections and 1/8 inch BSP air vent and drain.
Flow and return pipe connections are situated at the same end on the left side looking at the unit. On request we can deliver the unit with the connections on the right end side. This operation can also be easily carried out on site during installation.

## Condensate collection tray

Made from plastic with an “L” shape fitted on the inner casing.
The outside diameter of the condensate discharge pipe is 15mm.

## Controls and Accessories

See pages 44 - 64.

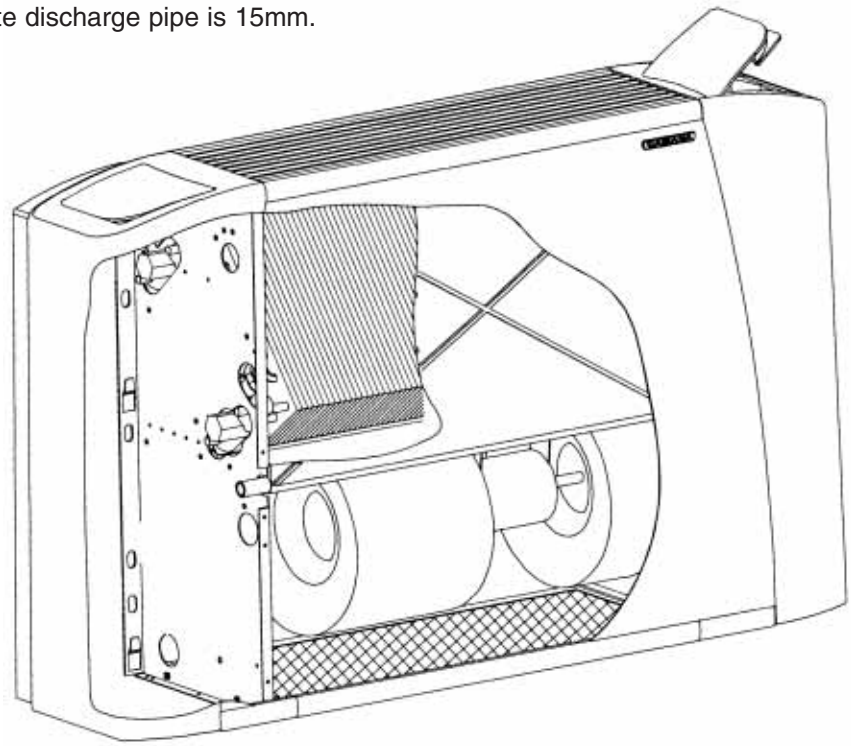

## Model styles

### **MV** Model

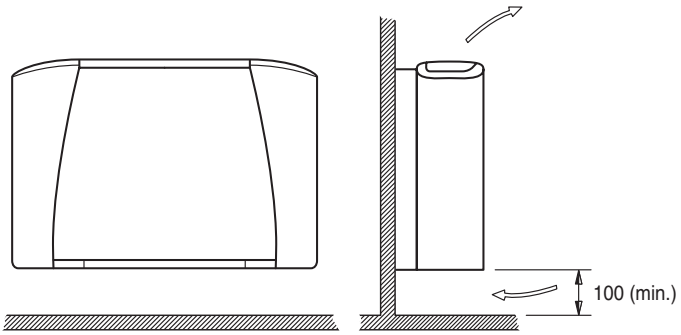


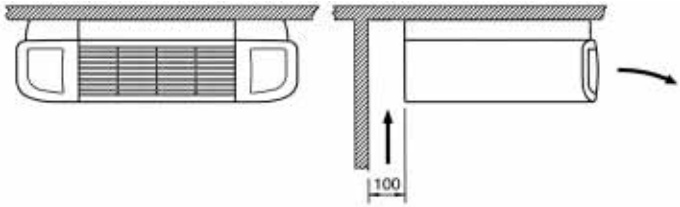


**Note:** to connect MV exposed model units to wall remote controls use the MV terminal adaptor kit Code 9060103.

### **MVB** Model

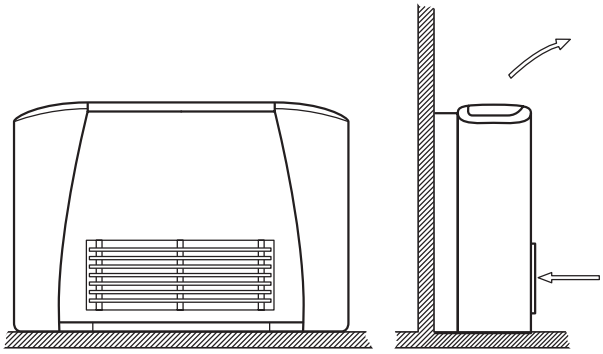

### **IV - IO** Model

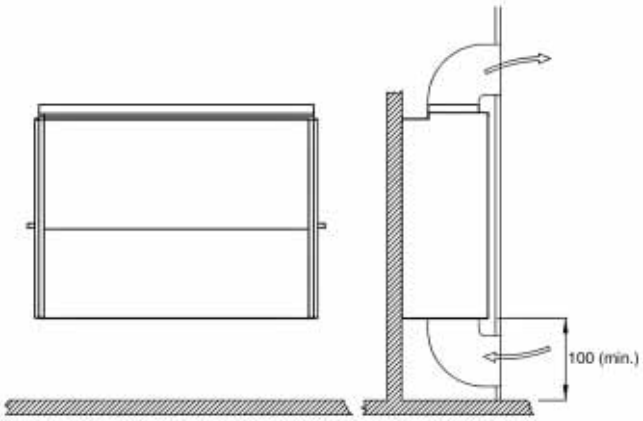


### **IV - IO** Model

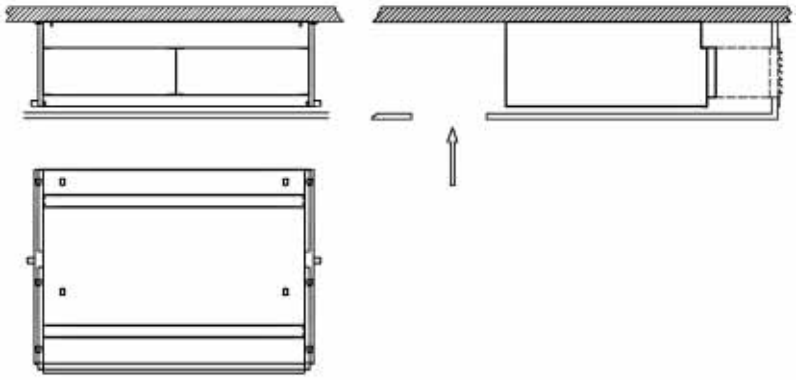

### **MO** Model

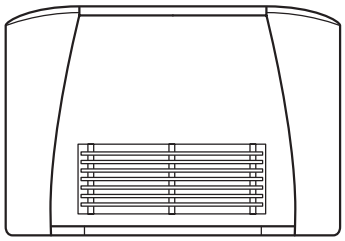

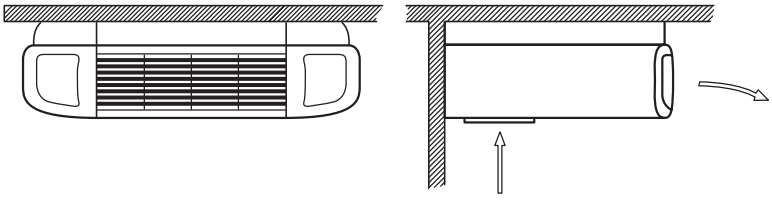

## Dimensions, Weight, Water contents

### **MV** Model

Low level exposed model

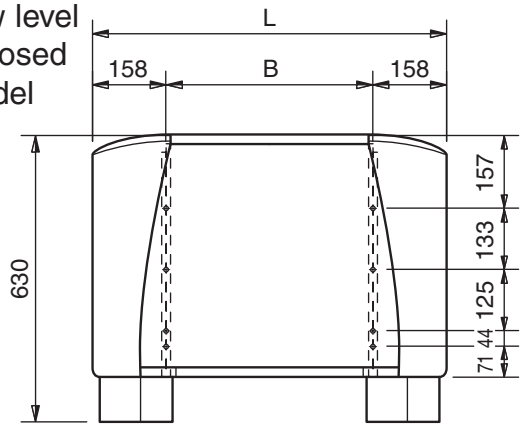


### **MVB** Model

Frontal intake low level exposed model

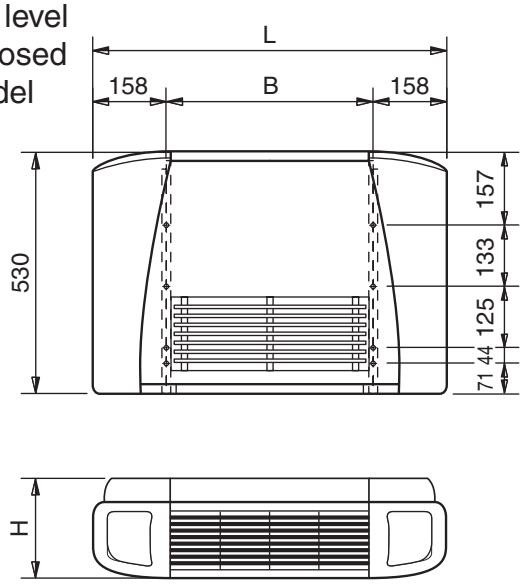


### COIL CONNECTIONS

3 or 4 ROW BATTERY

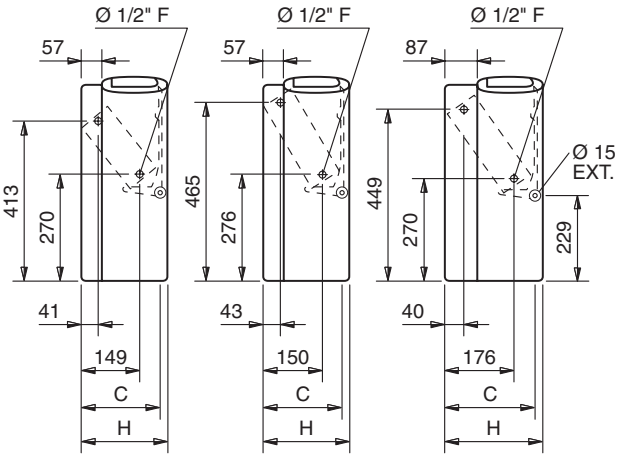


1 ROW SUPPLEMENTARY BATTERY

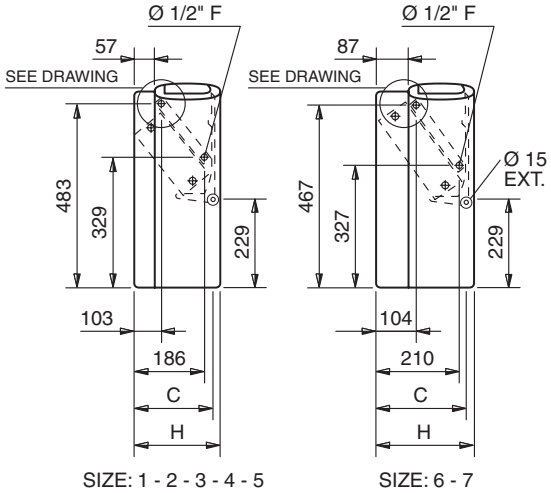


### **MO** Model

High level exposed model

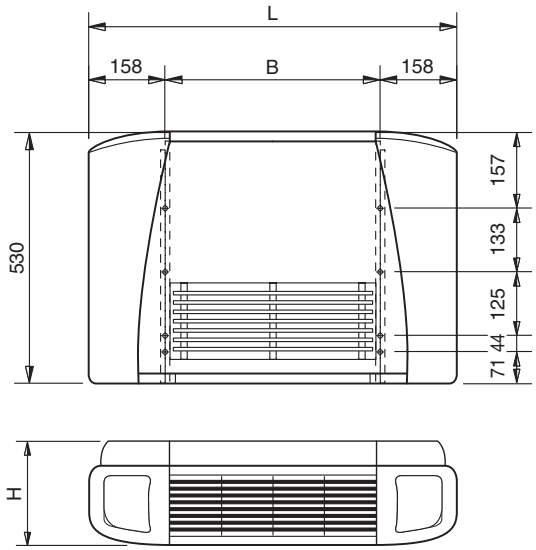


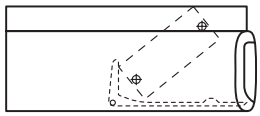

SIZE: 1 - 2 - 3

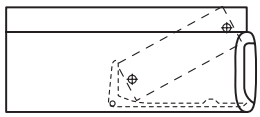

SIZE: 4 - 5 - 6 - 7

1 ROW BATTERY CONNECTION

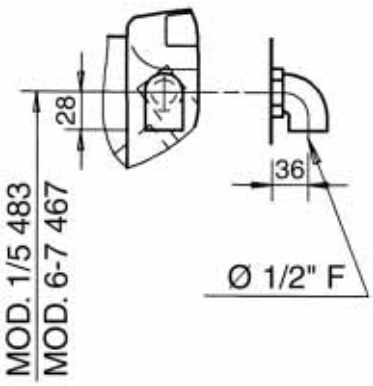

## IV - IO Model
Low level concealed model

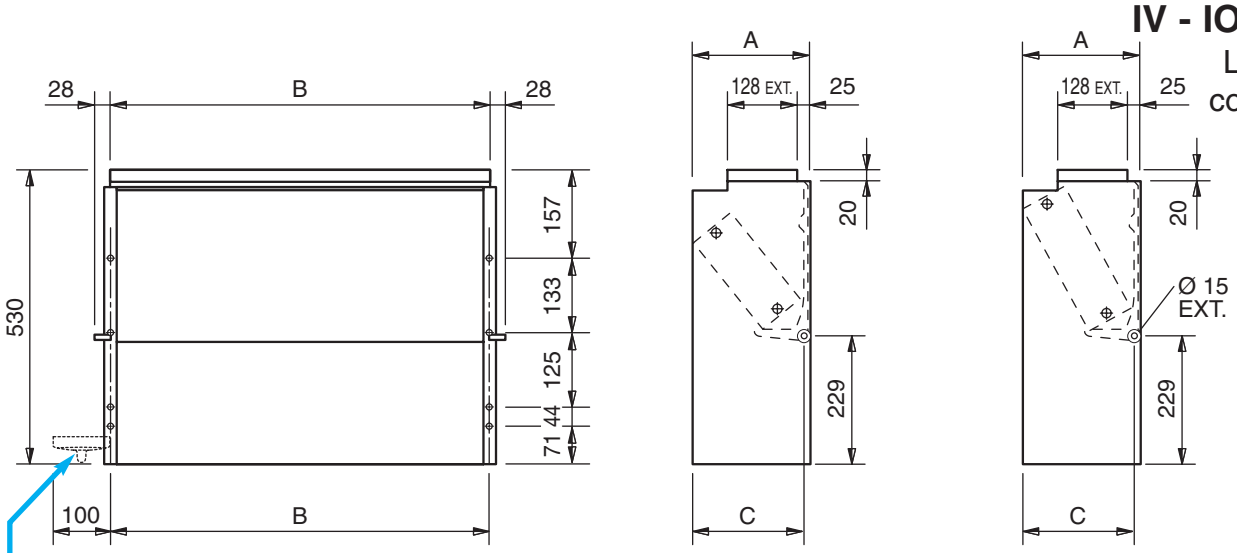


Condensate tray (optional)

## IV - IO Model
High level concealed model

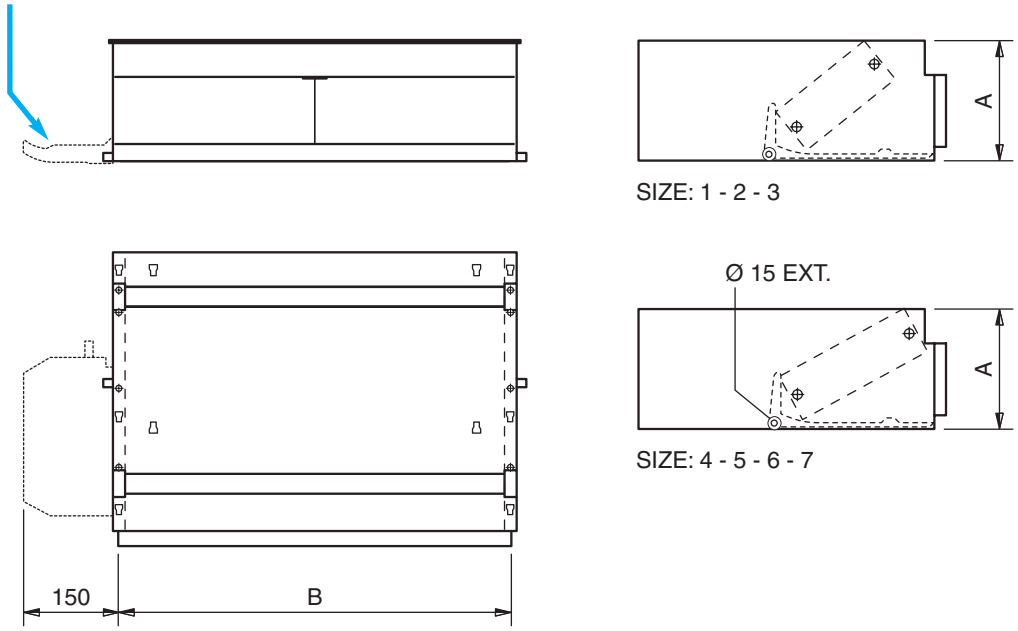


| MODEL | 13 | 14 | 23 | 24 | 33 | 34 | 43 | 44 | 53 | 54 | 63 | 64 | 73 | 74 |
|---|---|---|---|---|---|---|---|---|---|---|---|---|---|---|
| kg | 14 | 16 | 18 | 21 | 21 | 24 | 22 | 25 | 26 | 30 | 35 | 41 | 36 | 42 |
| l * | 0.6 | 0.8 | 0.9 | 1.3 | 1.3 | 1.7 | 1.6 | 2.2 | 1.7 | 2.4 | 1.9 | 2.8 | 1.9 | 2.8 |
| A | 218 | | 218 | | 218 | | 218 | | 218 | | 248 | | 248 | |
| B | 454 | | 669 | | 884 | | 884 | | 1099 | | 1099 | | 1099 | |
| L | 770 | | 985 | | 1200 | | 1200 | | 1415 | | 1415 | | 1415 | |
| H | 225 | | 225 | | 225 | | 225 | | 225 | | 255 | | 255 | |
| C | 206 | | 206 | | 206 | | 206 | | 206 | | 236 | | 236 | |

* Coil water contents (Litres)

# FSC Version

## 2 pipe units.

The following standard rating conditions are used:

**COOLING**

Entering air temperature + 27°C d.b., + 19°C w.b.
Water temperature + 7/12°C

**HEATING**

Entering air temperature + 20°C
Entering water temperature + 50°C
water flow rate as for the cooling conditions

| MODEL | | FSC 13 | | | FSC 23 | | | FSC 33 | | | FSC 43 | | | FSC 53 | | | FSC 63 | | | FSC 73 | | |
|---|---|---|---|---|---|---|---|---|---|---|---|---|---|---|---|---|---|---|---|---|---|---|
| Speed | | 1 | 2 | 3 | 1 | 2 | 3 | 1 | 2 | 3 | 1 | 2 | 3 | 1 | 2 | 3 | 1 | 2 | 3 | 1 | 2 | 3 |
| Air flow | m³/h | 190 | 240 | 300 | 290 | 360 | 450 | 380 | 480 | 600 | 480 | 600 | 750 | 650 | 800 | 1000 | 750 | 950 | 1200 | 850 | 1100 | 1400 |
| Cooling total emission | kW | 1,10 | 1,30 | 1,50 | 1,80 | 2,15 | 2,50 | 2,47 | 2,90 | 3,50 | 2,90 | 3,44 | 4,00 | 3,60 | 4,15 | 4,80 | 4,30 | 5,08 | 5,95 | 4,75 | 5,70 | 6,70 |
| Cooling sensible emission | kW | 0,83 | 1,00 | 1,25 | 1,39 | 1,68 | 2,10 | 1,95 | 2,35 | 2,95 | 2,21 | 2,68 | 3,35 | 2,67 | 3,24 | 4,05 | 3,30 | 4,00 | 5,00 | 3,76 | 4,56 | 5,70 |
| Heating | kW | 1,40 | 1,70 | 2,06 | 2,30 | 2,70 | 3,30 | 3,00 | 3,70 | 4,45 | 3,65 | 4,35 | 5,20 | 4,70 | 5,50 | 6,50 | 5,50 | 6,70 | 8,00 | 6,21 | 7,50 | 9,07 |
| ΔP Cooling | kPa | 2,6 | 3,5 | 4,6 | 7,9 | 10,6 | 14,1 | 7,0 | 9,7 | 12,9 | 10,0 | 13,5 | 17,9 | 16,8 | 18,2 | 27,8 | 12,0 | 16,0 | 21,1 | 16,6 | 22,6 | 29,7 |
| ΔP Heating | kPa | 2,1 | 2,9 | 3,8 | 6,5 | 8,6 | 11,4 | 6,0 | 8,2 | 11,0 | 8,2 | 11,0 | 14,5 | 14,1 | 18,1 | 23,4 | 10,4 | 14,1 | 18,4 | 14,6 | 19,7 | 25,8 |
| Fan | W | 20 | 30 | 40 | 45 | 50 | 60 | 60 | 80 | 95 | 65 | 80 | 95 | 65 | 85 | 125 | 120 | 145 | 180 | 135 | 170 | 190 |
| Sound power Lw dBA | dB(A) | 40 | 45 | 50 | 42 | 47 | 52 | 35 | 42 | 51 | 41 | 47 | 54 | 48 | 56 | 59 | 51 | 56 | 60 | 54 | 60 | 65 |
| Sound pressure Lp dBA | dB(A) | 31 | 36 | 41 | 33 | 38 | 43 | 26 | 33 | 42 | 32 | 38 | 45 | 39 | 47 | 50 | 42 | 47 | 51 | 45 | 51 | 56 |

| MODEL | | FSC 14 | | | FSC 24 | | | FSC 34 | | | FSC 44 | | | FSC 54 | | | FSC 64 | | | FSC 74 | | |
|---|---|---|---|---|---|---|---|---|---|---|---|---|---|---|---|---|---|---|---|---|---|---|
| Speed | | 1 | 2 | 3 | 1 | 2 | 3 | 1 | 2 | 3 | 1 | 2 | 3 | 1 | 2 | 3 | 1 | 2 | 3 | 1 | 2 | 3 |
| Air flow | m³/h | 190 | 240 | 300 | 290 | 360 | 450 | 380 | 480 | 600 | 480 | 600 | 750 | 650 | 800 | 1000 | 750 | 950 | 1200 | 850 | 1100 | 1400 |
| Cooling total emission | kW | 1,30 | 1,50 | 1,80 | 2,00 | 2,40 | 2,80 | 2,70 | 3,30 | 3,90 | 3,20 | 3,90 | 4,60 | 4,20 | 4,80 | 5,70 | 4,60 | 5,50 | 6,60 | 5,20 | 6,30 | 7,50 |
| Cooling sensible emission | kW | 0,98 | 1,19 | 1,48 | 1,43 | 1,75 | 2,17 | 2,05 | 2,49 | 3,10 | 2,51 | 3,05 | 3,80 | 3,17 | 3,85 | 4,80 | 3,64 | 4,40 | 5,50 | 4,16 | 4,80 | 6,30 |
| Heating | kW | 1,60 | 1,95 | 2,30 | 2,50 | 3,00 | 3,50 | 3,20 | 4,00 | 4,80 | 4,00 | 4,80 | 5,80 | 5,20 | 6,20 | 7,40 | 6,00 | 7,30 | 8,80 | 6,70 | 8,30 | 10,10 |
| ΔP Cooling | kPa | 7,0 | 9,8 | 13,1 | 13,1 | 18,0 | 24,7 | 8,7 | 12,4 | 17,0 | 7,4 | 10,0 | 13,6 | 11,8 | 15,6 | 20,7 | 8,0 | 11,0 | 15,0 | 10,1 | 14,4 | 19,6 |
| ΔP Heating | kPa | 3,7 | 5,2 | 7,0 | 11,2 | 15,1 | 21,1 | 7,3 | 10,3 | 14,1 | 6,0 | 8,2 | 11,1 | 9,6 | 11,6 | 16,8 | 7,9 | 10,7 | 14,2 | 10,4 | 14,0 | 18,0 |
| Fan | W | 20 | 30 | 50 | 45 | 50 | 60 | 60 | 80 | 95 | 65 | 80 | 95 | 65 | 85 | 125 | 120 | 145 | 180 | 135 | 170 | 190 |
| Sound power Lw dBA | dB(A) | 40 | 45 | 51 | 43 | 50 | 54 | 40 | 45 | 51 | 43 | 47 | 54 | 44 | 50 | 58 | 49 | 55 | 60 | 54 | 60 | 65 |
| Sound pressure Lp dBA | dB(A) | 31 | 36 | 42 | 34 | 41 | 45 | 31 | 36 | 42 | 34 | 38 | 45 | 35 | 41 | 49 | 40 | 46 | 51 | 45 | 51 | 56 |

## 4 pipe units.

The following standard rating conditions are used:

**COOLING**

Entering air temperature + 27°C d.b., + 19°C w.b.
Water temperature + 7/12°C

**HEATING**

Entering air temperature + 20°C
Water temperature + 70/60°C

| MODEL | | FSC 13+1 | | | FSC 23+1 | | | FSC 33+1 | | | FSC 43+1 | | | FSC 53+1 | | | FSC 63+1 | | | FSC 73+1 | | |
|---|---|---|---|---|---|---|---|---|---|---|---|---|---|---|---|---|---|---|---|---|---|---|
| Speed | | 1 | 2 | 3 | 1 | 2 | 3 | 1 | 2 | 3 | 1 | 2 | 3 | 1 | 2 | 3 | 1 | 2 | 3 | 1 | 2 | 3 |
| Air flow | m³/h | 190 | 240 | 300 | 290 | 360 | 450 | 380 | 480 | 600 | 480 | 600 | 750 | 650 | 800 | 1000 | 750 | 950 | 1200 | 850 | 1100 | 1400 |
| Cooling total emission | kW | 1,10 | 1,30 | 1,50 | 1,80 | 2,15 | 2,50 | 2,47 | 2,90 | 3,50 | 2,90 | 3,44 | 4,00 | 3,60 | 4,15 | 4,80 | 4,30 | 5,08 | 5,95 | 4,47 | 5,37 | 6,31 |
| Cooling sensible emission | kW | 0,83 | 1,00 | 1,25 | 1,39 | 1,68 | 2,10 | 1,95 | 2,35 | 2,95 | 2,21 | 2,68 | 3,35 | 2,67 | 3,24 | 4,05 | 3,30 | 4,00 | 5,00 | 3,60 | 4,30 | 5,40 |
| Heating | kW | 1,25 | 1,35 | 1,75 | 2,05 | 2,35 | 2,70 | 2,65 | 3,10 | 3,60 | 2,93 | 3,31 | 3,69 | 3,90 | 4,50 | 5,30 | 4,20 | 5,00 | 5,50 | 4,60 | 5,40 | 6,10 |
| ΔP Cooling | kPa | 3,2 | 4,3 | 5,7 | 7,9 | 10,6 | 14,1 | 6,0 | 8,3 | 11,1 | 10,0 | 13,5 | 17,9 | 14,2 | 18,2 | 23,5 | 13,0 | 17,2 | 22,7 | 13,7 | 18,6 | 24,4 |
| ΔP Heating | kPa | 2,2 | 2,8 | 3,7 | 5,3 | 6,7 | 8,6 | 2,4 | 3,2 | 4,3 | 2,3 | 2,9 | 3,7 | 4,7 | 6,9 | 8,8 | 4,7 | 6,2 | 7,6 | 5,9 | 7,7 | 9,6 |
| Fan | W | 25 | 37 | 49 | 45 | 50 | 60 | 60 | 80 | 95 | 65 | 80 | 95 | 60 | 90 | 130 | 120 | 145 | 180 | 135 | 170 | 190 |
| Sound power Lw dBA | dB(A) | 40 | 45 | 51 | 42 | 50 | 54 | 35 | 42 | 51 | 45 | 48 | 54 | 48 | 54 | 59 | 49 | 55 | 60 | 55 | 62 | 66 |
| Sound pressure Lp dBA | dB(A) | 31 | 36 | 42 | 33 | 41 | 45 | 26 | 33 | 42 | 36 | 39 | 45 | 39 | 45 | 50 | 40 | 46 | 51 | 46 | 53 | 57 |

The sound pressure levels apply to the reverberant field of a 100 m³ room and a reverberation time of 0.5 sec.

## Operation limits

Highest water inlet temperature..... + 85°C
Lowest water inlet temperature..... + 5°C
Highest working pressure..... 8 bar

**Note:** For MO model the maximum installation height is 2,8 m.
On heating it must be payed attention to rooms where the floor temperature is particularly low (for example less than 5°C).
In this situation the floor can cool the lower layer of air to a level that can stop the uniform diffusion of the hot air coming from the unit.

Water flow limits for 3 row battery (l/h)

| MODEL | FSC 13 | FSC 23 | FSC 33 | FSC 43 | FSC 53 | FSC 63 | FSC 73 |
|---|---|---|---|---|---|---|---|
| Lowest | 100 | 150 | 150 | 200 | 250 | 300 | 400 |
| Highest | 500 | 750 | 1000 | 1000 | 1500 | 2000 | 2000 |

Water flow limits for 4 row battery (l/h)

| MODEL | FSC 14 | FSC 24 | FSC 34 | FSC 44 | FSC 54 | FSC 64 | FSC 74 |
|---|---|---|---|---|---|---|---|
| Lowest | 100 | 150 | 200 | 250 | 300 | 400 | 450 |
| Highest | 750 | 1000 | 1000 | 1500 | 2000 | 2000 | 2250 |

Water flow limits for 1 row battery (l/h)

| MODEL | FSC 13+1<br>FSC 14+1 | FSC 23+1<br>FSC 24+1 | FSC 33+1<br>FSC 34+1 | FSC 43+1<br>FSC 44+1 | FSC 53+1<br>FSC 54+1 | FSC 63+1<br>FSC 64+1 | FSC 73+1<br>FSC 74+1 |
|---|---|---|---|---|---|---|---|
| Lowest | 60 | 80 | 100 | 130 | 160 | 180 | 200 |
| Highest | 250 | 350 | 450 | 500 | 650 | 700 | 750 |

## Motor electrical data

| MODEL | | FSC 13(+1)<br>FSC 14(+1) | FSC 23(+1)<br>FSC 24(+1) | FSC 33(+1)<br>FSC 34(+1) | FSC 43(+1)<br>FSC 44(+1) | FSC 53(+1)<br>FSC 54(+1) | FSC 63(+1)<br>FSC 64(+1) | FSC 73(+1)<br>FSC 74(+1) |
|---|---|---|---|---|---|---|---|---|
| 230/1 | W | 53 | 64 | 79 | 98 | 170 | 190 | 310 |
| 50Hz | A | 0,23 | 0,28 | 0,36 | 0,44 | 0,74 | 0,84 | 1,40 |

### Emission (k) and air flow (Q) correction factors at high speed in accordance to the requested available pressure (Δp).

| MODEL | | FSC 1 | FSC 2 | FSC 3 | FSC 4 | FSC 5 | FSC 6 | FSC 7 |
|---|---|---|---|---|---|---|---|---|
| ΔP 10 Pa | Q=m³/h | 270 | 400 | 530 | 680 | 900 | 1130 | 1300 |
| | (W) · k | 0.95 | 0.94 | 0.94 | 0.95 | 0.96 | 0.96 | 0.97 |
| ΔP 20 Pa | Q=m³/h | 230 | 340 | 450 | 580 | 800 | 1030 | 1180 |
| | (W) · k | 0.87 | 0.86 | 0.85 | 0.88 | 0.91 | 0.91 | 0.92 |
| ΔP 30 Pa | Q=m³/h | 170 | 280 | 390 | 500 | 700 | 950 | 1090 |
| | (W) · k | 0.75 | 0.79 | 0.80 | 0.81 | 0.85 | 0.87 | 0.87 |

## Cooling emission
## 3 row battery

**E.A.T. °C: dry bulb + 27, wet bulb + 19**

| MODEL | Speed | Air flow m³/h m³/sec. | EWT 5 - LWT 10 C° | | | EWT 7 - LWT 12 C° | | | EWT 12 - LWT 17 C° | | |
|---|---|---|---|---|---|---|---|---|---|---|---|
| | | | Water flow l/h | Emission Tot. Watt | Emission Sen. Watt | Water flow l/h | Emission Tot. Watt | Emission Sen. Watt | Water flow l/h | Emission Tot. Watt | Emission Sen. Watt |
| FSC 13 | High | 300 0,08 | 330 | 1900 | 1500 | 260 | 1500 | 1250 | 140 | 820 | 820 |
| | Medium | 240 0,07 | 280 | 1620 | 1200 | 225 | 1300 | 1000 | 120 | 700 | 700 |
| | Low | 190 0,05 | 235 | 1370 | 990 | 190 | 1100 | 830 | 100 | 590 | 590 |
| FSC 23 | High | 450 0,12 | 550 | 3200 | 2500 | 430 | 2500 | 2100 | 235 | 1360 | 1360 |
| | Medium | 360 0,10 | 470 | 2720 | 2000 | 370 | 2150 | 1680 | 200 | 1160 | 1160 |
| | Low | 290 0,08 | 400 | 2300 | 1650 | 310 | 1800 | 1390 | 170 | 980 | 980 |
| FSC 33 | High | 600 0,17 | 780 | 4500 | 3550 | 605 | 3500 | 2950 | 330 | 1900 | 1900 |
| | Medium | 480 0,13 | 660 | 3830 | 2840 | 500 | 2900 | 2350 | 280 | 1620 | 1620 |
| | Low | 380 0,10 | 560 | 3240 | 2340 | 425 | 2470 | 1950 | 235 | 1370 | 1370 |
| FSC 43 | High | 750 0,21 | 880 | 5100 | 4050 | 690 | 4000 | 3350 | 380 | 2200 | 2200 |
| | Medium | 600 0,17 | 750 | 4340 | 3240 | 595 | 3440 | 2680 | 325 | 1870 | 1870 |
| | Low | 480 0,13 | 635 | 3670 | 2670 | 500 | 2900 | 2210 | 275 | 1580 | 1580 |
| FSC 53 | High | 1000 0,28 | 1060 | 6150 | 4900 | 830 | 4800 | 4050 | 450 | 2600 | 2600 |
| | Medium | 800 0,22 | 905 | 5230 | 3920 | 720 | 4150 | 3240 | 380 | 2210 | 2210 |
| | Low | 650 0,18 | 765 | 4430 | 3230 | 620 | 3600 | 2670 | 325 | 1870 | 1870 |
| FSC 63 | High | 1200 0,33 | 1330 | 7700 | 6000 | 1030 | 5950 | 5000 | 560 | 3250 | 3250 |
| | Medium | 950 0,26 | 1130 | 6550 | 4800 | 880 | 5080 | 4000 | 475 | 2760 | 2760 |
| | Low | 750 0,21 | 960 | 5540 | 3960 | 745 | 4300 | 3300 | 405 | 2340 | 2340 |
| FSC 73 | High | 1400 0,39 | 1505 | 8700 | 6800 | 1160 | 6310 | 5700 | 640 | 3700 | 3700 |
| | Medium | 1100 0,31 | 1280 | 7400 | 5440 | 985 | 5370 | 4560 | 545 | 3150 | 3150 |
| | Low | 850 0,24 | 1080 | 6260 | 4490 | 820 | 4470 | 3760 | 460 | 2660 | 2660 |

Correction factors for different entering air temperatures

| E.A.T. C° | K |
|---|---|
| 28/20 | 1,14 |
| 26/18,5 | 0,93 |
| 25/18 | 0,84 |

## Cooling emission graphs
## 3 row battery

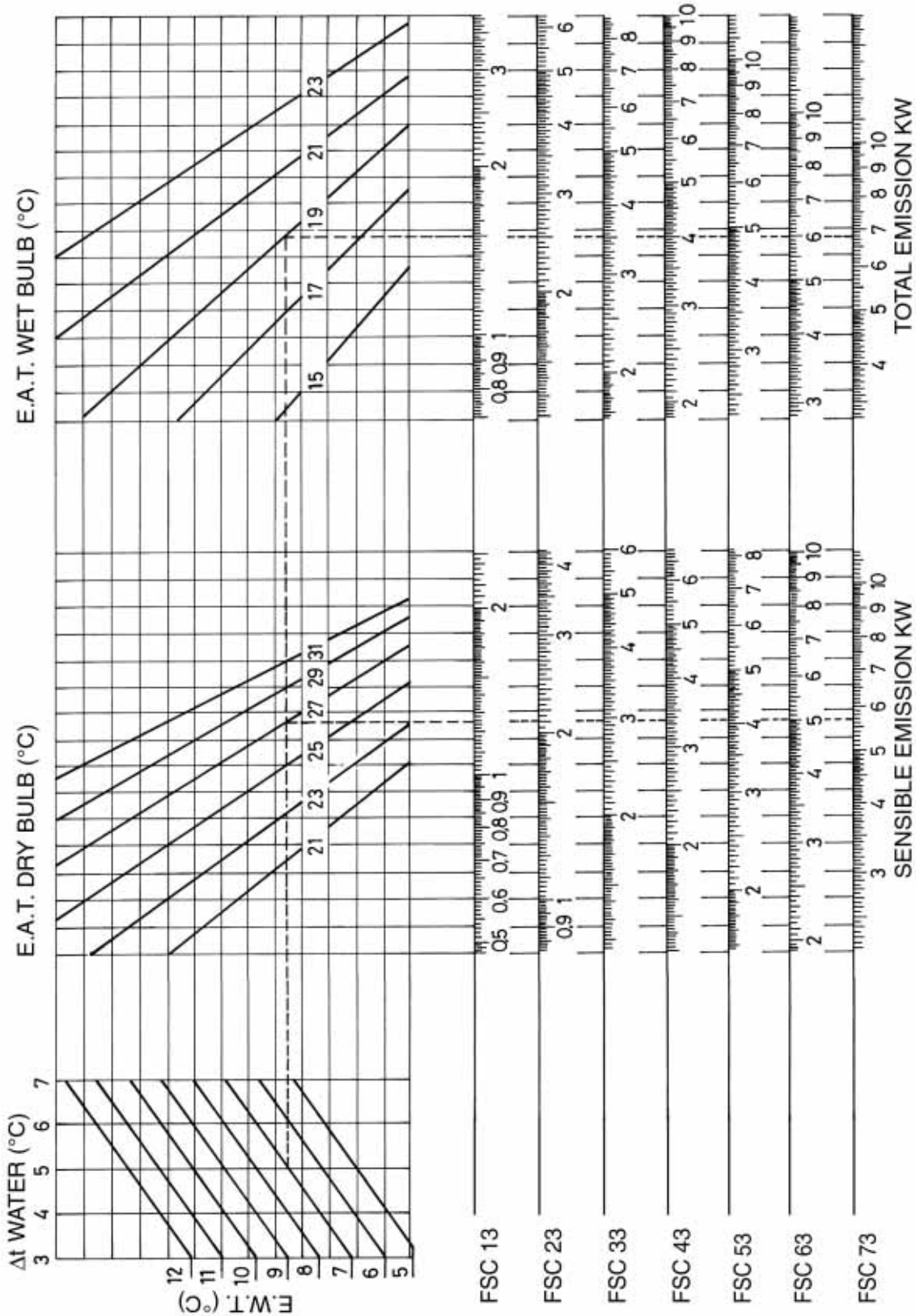


## Cooling output figures refer to high speed

Medium and low speed figures are obtained multiplying high speed figures by the following correction factors:

- **Medium speed** TOTAL K = 0,85 SENSIBLE K = 0,80
- **Low speed** TOTAL K = 0,72 SENSIBLE K = 0,66

**ATTENTION:**
A sensible heat figure higher than a total heat figure shows that the cooling is obtained without dehumidification, therefore the emission to refer to is the sensible one.

## Cooling emission
## 4 row battery

**E.A.T. °C: dry bulb + 27, wet bulb + 19**

| MODEL | Speed | Air flow m³/h m³/sec. | EWT 5 - LWT 10°C Water flow l/h | EWT 5 - LWT 10°C Emission Tot. Watt | EWT 5 - LWT 10°C Emission Sen. Watt | EWT 7 - LWT 12°C Water flow l/h | EWT 7 - LWT 12°C Emission Tot. Watt | EWT 7 - LWT 12°C Emission Sen. Watt | EWT 12 - LWT 17°C Water flow l/h | EWT 12 - LWT 17°C Emission Tot. Watt | EWT 12 - LWT 17°C Emission Sen. Watt |
|---|---|---|---|---|---|---|---|---|---|---|---|
| FSC 14 | High | 300 0,08 | 400 | 2300 | 1780 | 310 | 1800 | 1480 | 170 | 980 | 980 |
| | Medium | 240 0,07 | 335 | 1950 | 1430 | 260 | 1500 | 1190 | 145 | 830 | 830 |
| | Low | 190 0,05 | 285 | 1650 | 1180 | 225 | 1300 | 980 | 120 | 700 | 700 |
| FSC 24 | High | 450 0,12 | 620 | 3600 | 2800 | 485 | 2800 | 2170 | 265 | 1540 | 1540 |
| | Medium | 360 0,10 | 530 | 3050 | 2250 | 415 | 2400 | 1750 | 225 | 1310 | 1310 |
| | Low | 290 0,08 | 450 | 2590 | 1850 | 345 | 2000 | 1430 | 190 | 1100 | 1100 |
| FSC 34 | High | 600 0,17 | 865 | 5000 | 3700 | 675 | 3900 | 3100 | 360 | 2100 | 2100 |
| | Medium | 480 0,13 | 735 | 4250 | 2970 | 570 | 3300 | 2490 | 310 | 1780 | 1780 |
| | Low | 380 0,10 | 620 | 3600 | 2450 | 465 | 2700 | 2050 | 260 | 1500 | 1500 |
| FSC 44 | High | 750 0,21 | 1000 | 5800 | 4500 | 795 | 4600 | 3800 | 430 | 2500 | 2500 |
| | Medium | 600 0,17 | 850 | 4930 | 3600 | 675 | 3900 | 3050 | 365 | 2120 | 2120 |
| | Low | 480 0,13 | 720 | 4170 | 2980 | 550 | 3200 | 2510 | 310 | 1800 | 1800 |
| FSC 54 | High | 1000 0,28 | 1245 | 7200 | 5700 | 985 | 5700 | 4800 | 535 | 3100 | 3100 |
| | Medium | 800 0,22 | 1060 | 6120 | 4570 | 830 | 4800 | 3850 | 455 | 2630 | 2630 |
| | Low | 650 0,18 | 895 | 5180 | 3770 | 725 | 4200 | 3170 | 380 | 2230 | 2230 |
| FSC 64 | High | 1200 0,33 | 1450 | 8400 | 6600 | 1140 | 6600 | 5500 | 620 | 3600 | 3600 |
| | Medium | 950 0,26 | 1235 | 7140 | 5300 | 950 | 5500 | 4400 | 530 | 3060 | 3060 |
| | Low | 750 0,21 | 1045 | 6050 | 4360 | 795 | 4600 | 3640 | 450 | 2590 | 2590 |
| FSC 74 | High | 1400 0,39 | 1660 | 9600 | 7600 | 1295 | 7500 | 6300 | 710 | 4100 | 4100 |
| | Medium | 1100 0,31 | 1410 | 8160 | 6100 | 1090 | 6300 | 4800 | 600 | 3480 | 3480 |
| | Low | 850 0,24 | 1195 | 6910 | 5030 | 900 | 5200 | 4160 | 510 | 2950 | 2950 |

Correction factors for different entering air temperatures

| E.A.T. C° | K |
|---|---|
| 28/20 | 1,14 |
| 26/18,5 | 0,93 |
| 25/18 | 0,84 |

## Cooling emission graphs
## 4 row battery

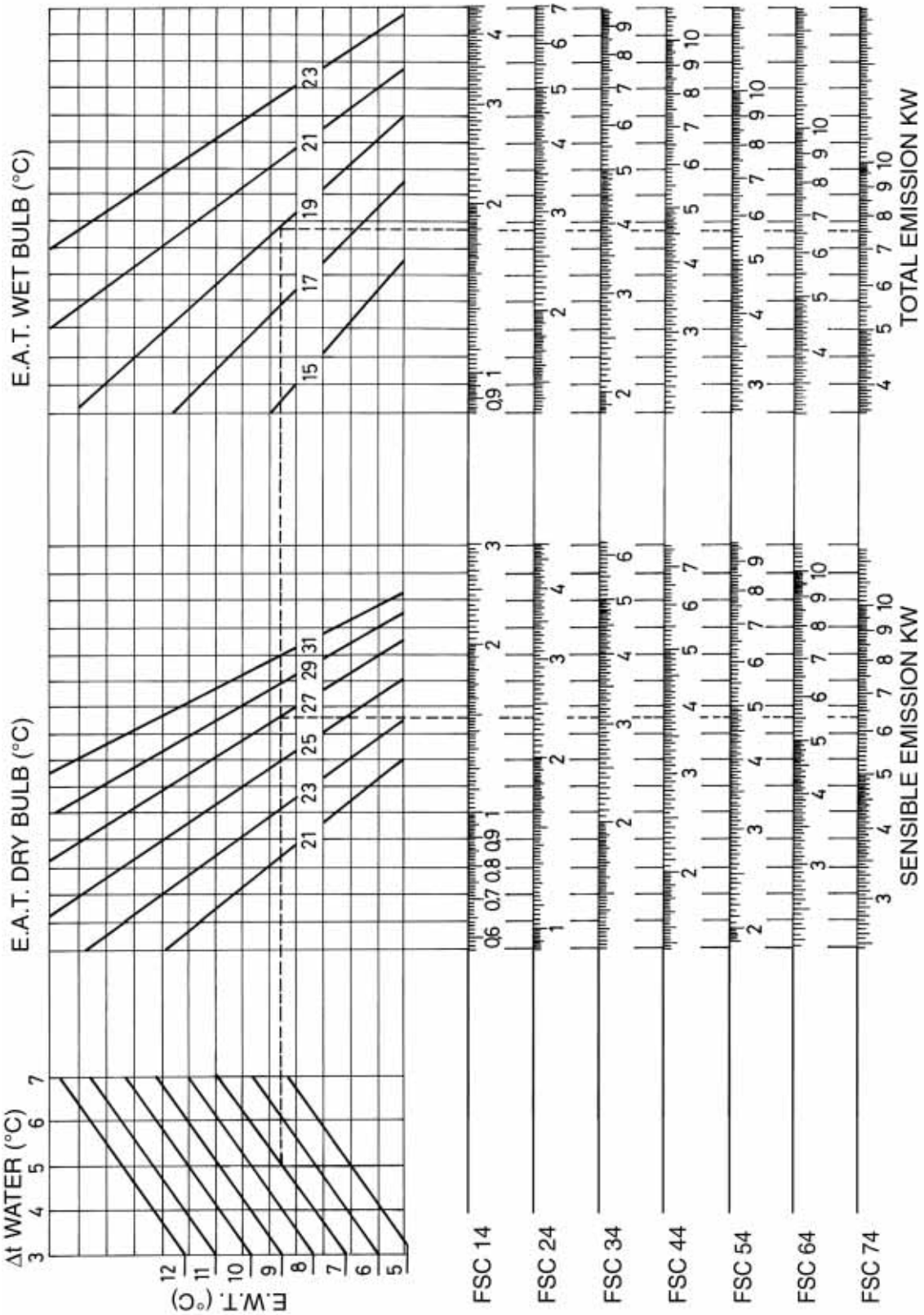


## Cooling output figures refer to high speed

Medium and low speed figures are obtained multiplying high speed figures by the following correction factors:

- **Medium speed** TOTAL K = 0,85 SENSIBLE K = 0,80
- **Low speed** TOTAL K = 0,72 SENSIBLE K = 0,66

**ATTENTION:**
A sensible heat figure higher than a total heat figure shows that the cooling is obtained without dehumidification, therefore the emission to refer to is the sensible one.

## Heating emission
## E.A.T. °C: 20

| SIZE | Speed | Air flow m³/h m³/sec. | 3 row battery | | | | | | 4 row battery | | | | | |
|---|---|---|---|---|---|---|---|---|---|---|---|---|---|---|
| | | | EWT 50 - LWT 40°C | | EWT 70 - LWT 60°C | | EWT 85 - LWT 75°C | | EWT 50 - LWT 40°C | | EWT 70 - LWT 60°C | | EWT 85 - LWT 75°C | |
| | | | Water flow l/h | Emission Watt | Water flow l/h | Emission Watt | Water flow l/h | Emission Watt | Water flow l/h | Emission Watt | Water flow l/h | Emission Watt | Water flow l/h | Emission Watt |
| 1 | High | 300 0,08 | 155 | 1800 | 310 | 3600 | 405 | 4700 | 180 | 2050 | 345 | 4000 | 450 | 5200 |
| | Medium | 240 0,07 | 130 | 1500 | 260 | 3000 | 335 | 3900 | 155 | 1800 | 295 | 3400 | 380 | 4400 |
| | Low | 190 0,05 | 110 | 1300 | 215 | 2500 | 285 | 3300 | 120 | 1400 | 240 | 2800 | 310 | 3600 |
| 2 | High | 450 0,12 | 260 | 3000 | 500 | 5800 | 660 | 7600 | 270 | 3100 | 530 | 6100 | 690 | 8000 |
| | Medium | 360 0,10 | 210 | 2400 | 405 | 4700 | 525 | 6100 | 235 | 2700 | 460 | 5300 | 595 | 6900 |
| | Low | 290 0,08 | 180 | 2100 | 345 | 4000 | 450 | 5200 | 200 | 2300 | 380 | 4400 | 490 | 5700 |
| 3 | High | 600 0,17 | 345 | 4000 | 675 | 7800 | 890 | 10300 | 375 | 4350 | 725 | 8400 | 950 | 11000 |
| | Medium | 480 0,13 | 285 | 3300 | 560 | 6500 | 735 | 8500 | 310 | 3600 | 605 | 7000 | 785 | 9100 |
| | Low | 380 0,10 | 235 | 2700 | 460 | 5300 | 595 | 6900 | 250 | 2900 | 485 | 5600 | 630 | 7300 |
| 4 | High | 750 0,21 | 405 | 4700 | 785 | 9100 | 1040 | 12000 | 450 | 5200 | 875 | 10100 | 1150 | 13300 |
| | Medium | 600 0,17 | 335 | 3900 | 655 | 7600 | 855 | 9900 | 370 | 4300 | 725 | 8400 | 940 | 10900 |
| | Low | 480 0,13 | 285 | 3300 | 555 | 6400 | 715 | 8300 | 310 | 3600 | 605 | 7000 | 785 | 9100 |
| 5 | High | 1000 0,28 | 520 | 6000 | 1000 | 11600 | 1320 | 15300 | 570 | 6600 | 1115 | 12900 | 1460 | 16900 |
| | Medium | 800 0,22 | 430 | 5000 | 830 | 9600 | 1080 | 12500 | 485 | 5600 | 940 | 10900 | 1230 | 14200 |
| | Low | 650 0,18 | 365 | 4200 | 710 | 8200 | 925 | 10700 | 405 | 4700 | 785 | 9100 | 1020 | 11800 |
| 6 | High | 1200 0,33 | 620 | 7200 | 1210 | 14000 | 1590 | 18400 | 685 | 7900 | 1330 | 15400 | 1745 | 20200 |
| | Medium | 950 0,26 | 520 | 6000 | 1010 | 11700 | 1315 | 15200 | 570 | 6600 | 1105 | 12800 | 1435 | 16600 |
| | Low | 750 0,21 | 430 | 5000 | 830 | 9600 | 1080 | 12500 | 470 | 5400 | 910 | 10500 | 1185 | 13700 |
| 7 | High | 1400 0,39 | 710 | 8200 | 1375 | 15900 | 1800 | 20800 | 785 | 9050 | 1520 | 17600 | 1990 | 23000 |
| | Medium | 1100 0,31 | 590 | 6800 | 1130 | 13100 | 1470 | 17000 | 650 | 7500 | 1255 | 14500 | 1635 | 18900 |
| | Low | 850 0,24 | 485 | 5600 | 940 | 10900 | 1225 | 14200 | 520 | 6000 | 1010 | 11700 | 1315 | 15200 |

Correction factors for different entering air temperatures

| W.T. C° | E.A.T., C° | | | |
|---|---|---|---|---|
| | 22 | 18 | 16 | 14 |
| **50/40** | 0,91 | 1,09 | 1,15 | 1,23 |
| **70/60** | 0,95 | 1,05 | 1,09 | 1,13 |
| **85/75** | 0,96 | 1,04 | 1,07 | 1,11 |

## Water pressure drop

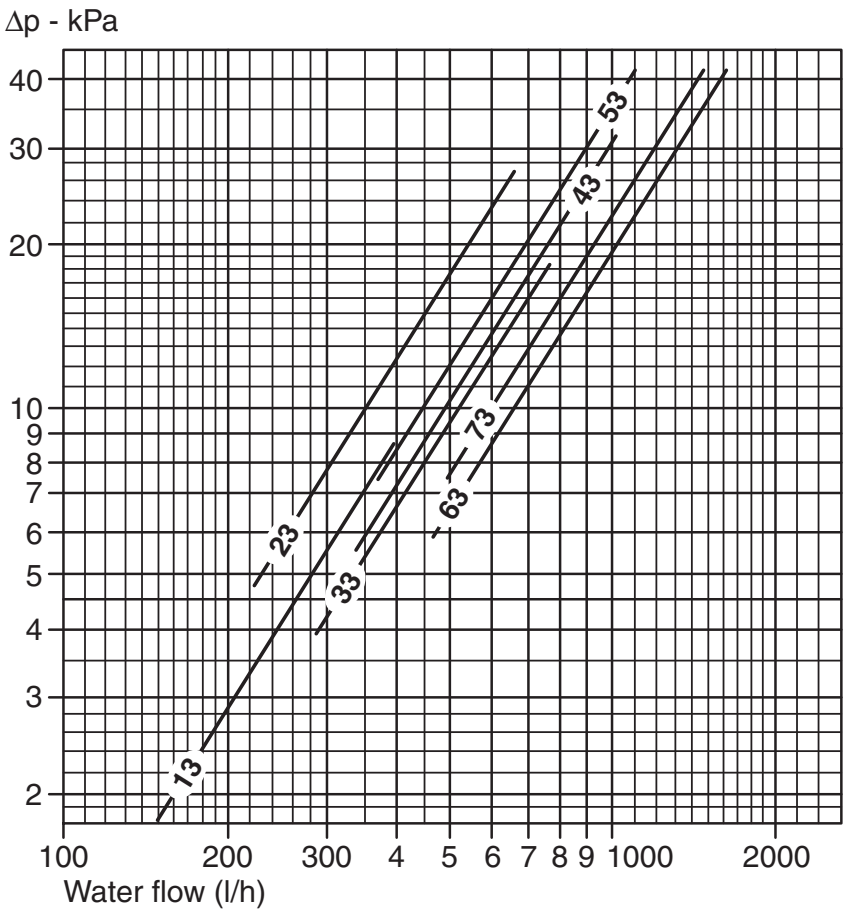


**FSC**
3 ROWS

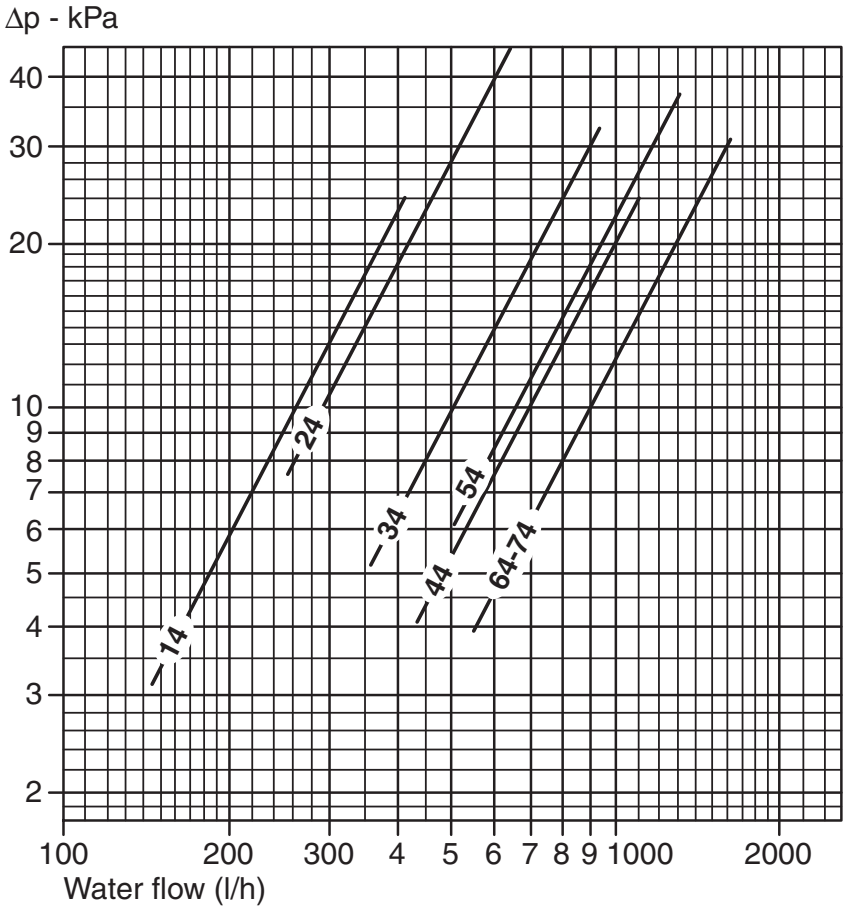


**FSC**
4 ROWS

The water pressure drop figures refer to a mean water temperature of 10°C; for different temperature, multiply the pressure drop figures by the correction factors K.

| °C | K |
|---|---|
| 20 | 0,94 |
| 30 | 0,90 |
| 40 | 0,86 |
| 50 | 0,82 |
| 60 | 0,78 |
| 70 | 0,74 |
| 80 | 0,70 |

## Heating emission graphs
## 3 row battery

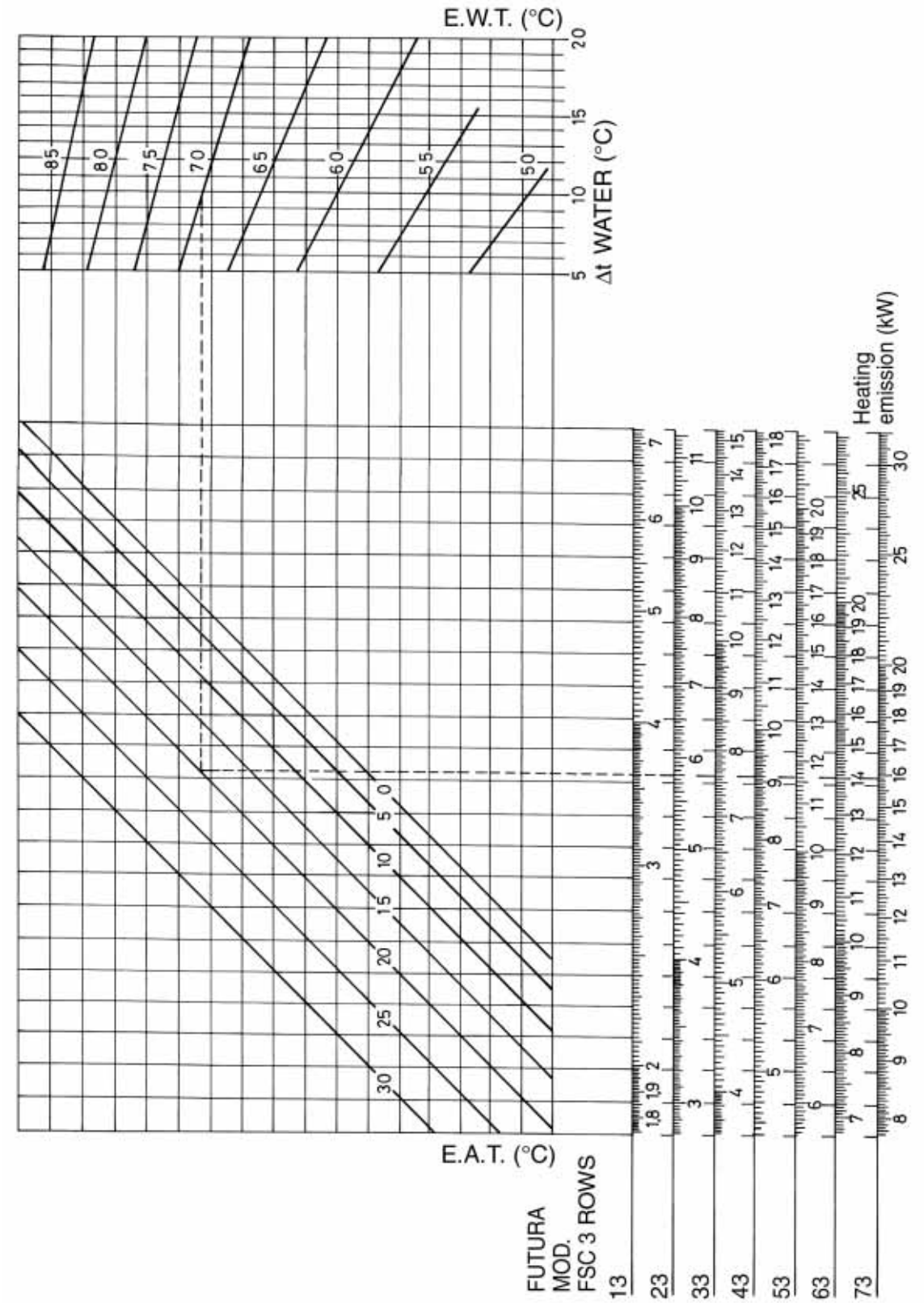


## Heating emission figures refer to high speed

Medium and low speed figures are obtained multiplying high speed figures by the following correction factors:

- **Medium speed** = 0,84
- **Low speed** = 0,70

## Heating emission graphs
## 4 row battery

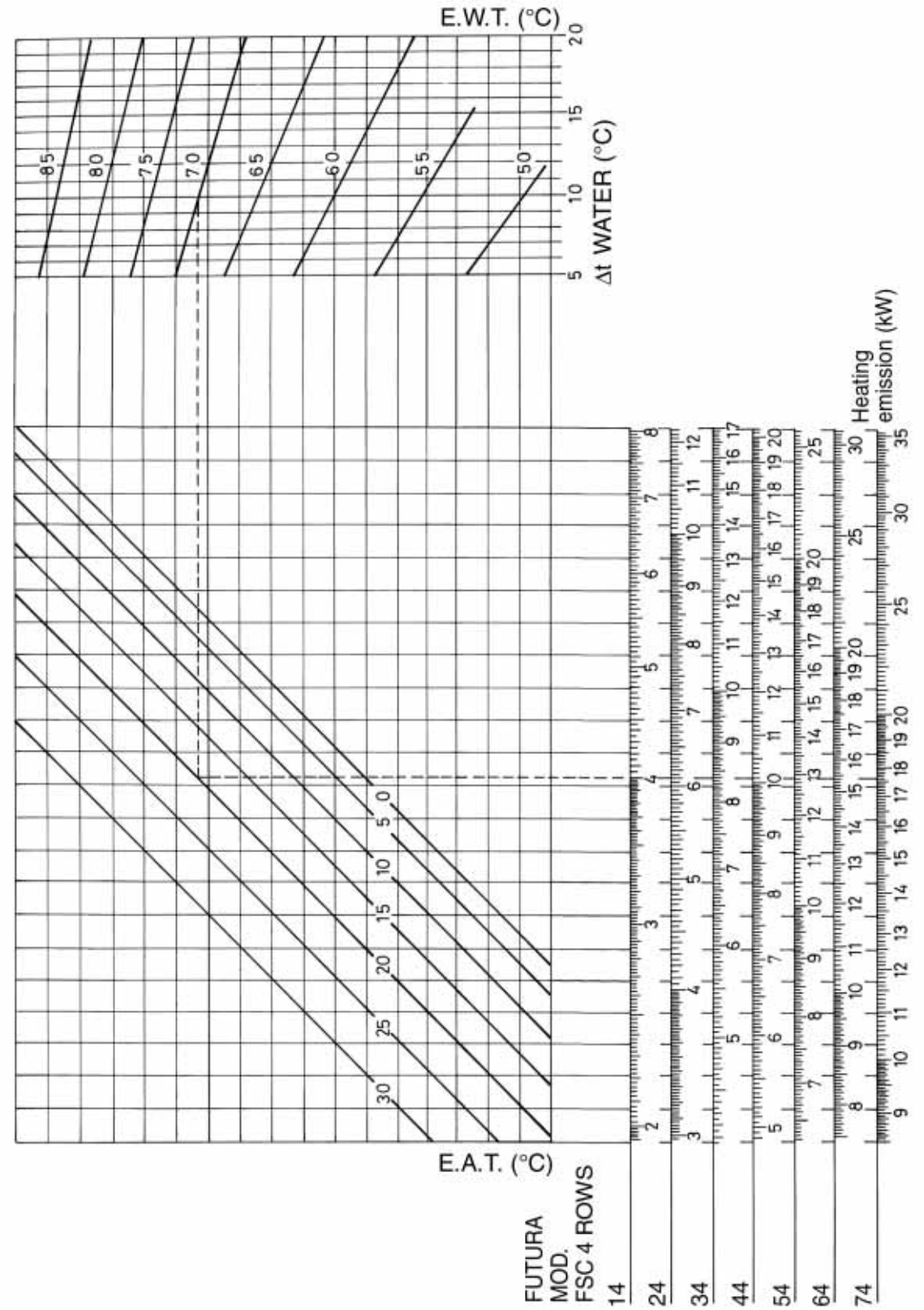


## Heating emission figures refer to high speed

Medium and low speed figures are obtained multiplying high speed figures by the following correction factors:

- **Medium speed** = 0,84
- **Low speed** = 0,70

## Heating emission
## 1 row battery (supplementary battery)

**E.A.T. °C: 20**

| SIZE | Speed | Air flow m³/h / m³/sec. | EWT 50 - LWT 40°C Water flow l/h | EWT 50 - LWT 40°C Emission Watt | EWT 70 - LWT 60°C Water flow l/h | EWT 70 - LWT 60°C Emission Watt | EWT 85 - LWT 75°C Water flow l/h | EWT 85 - LWT 75°C Emission Watt |
|---|---|---|---|---|---|---|---|---|
| 1 | High | 300 / 0,08 | 80 | 900 | 150 | 1750 | 200 | 2300 |
| | Medium | 240 / 0,07 | 60 | 700 | 120 | 1350 | 155 | 1800 |
| | Low | 190 / 0,05 | 55 | 650 | 110 | 1250 | 140 | 1600 |
| 2 | High | 450 / 0,12 | 120 | 1400 | 235 | 2700 | 305 | 3500 |
| | Medium | 360 / 0,10 | 105 | 1200 | 205 | 2350 | 265 | 3060 |
| | Low | 290 / 0,08 | 90 | 1050 | 180 | 2050 | 230 | 2650 |
| 3 | High | 600 / 0,17 | 160 | 1850 | 310 | 3600 | 405 | 4700 |
| | Medium | 480 / 0,13 | 140 | 1600 | 270 | 3100 | 345 | 4000 |
| | Low | 380 / 0,10 | 120 | 1400 | 230 | 2650 | 300 | 3450 |
| 4 | High | 750 / 0,21 | 175 | 2000 | 315 | 3690 | 445 | 5150 |
| | Medium | 600 / 0,17 | 155 | 1800 | 285 | 3310 | 395 | 4550 |
| | Low | 480 / 0,13 | 140 | 1600 | 250 | 2930 | 350 | 4050 |
| 5 | High | 1000 / 0,28 | 240 | 2750 | 460 | 5300 | 595 | 6900 |
| | Medium | 800 / 0,22 | 205 | 2350 | 390 | 4500 | 505 | 5850 |
| | Low | 650 / 0,18 | 175 | 2000 | 340 | 3900 | 435 | 5050 |
| 6 | High | 1200 / 0,33 | 245 | 2850 | 475 | 5500 | 625 | 7200 |
| | Medium | 950 / 0,26 | 225 | 2600 | 435 | 5000 | 565 | 6500 |
| | Low | 750 / 0,21 | 190 | 2200 | 365 | 4200 | 470 | 5450 |
| 7 | High | 1400 / 0,39 | 275 | 3150 | 530 | 6100 | 690 | 8000 |
| | Medium | 1100 / 0,31 | 240 | 2800 | 470 | 5400 | 605 | 7000 |
| | Low | 850 / 0,24 | 210 | 2400 | 400 | 4600 | 520 | 6000 |

Correction factors for different entering air temperatures

| W.T.°C | E.A.T., °C 22 | 18 | 16 | 14 |
|---|---|---|---|---|
| **50/40** | 0,91 | 1,09 | 1,15 | 1,23 |
| **70/60** | 0,95 | 1,05 | 1,09 | 1,13 |
| **85/75** | 0,96 | 1,04 | 1,07 | 1,11 |

## Water pressure drop
## 1 row battery

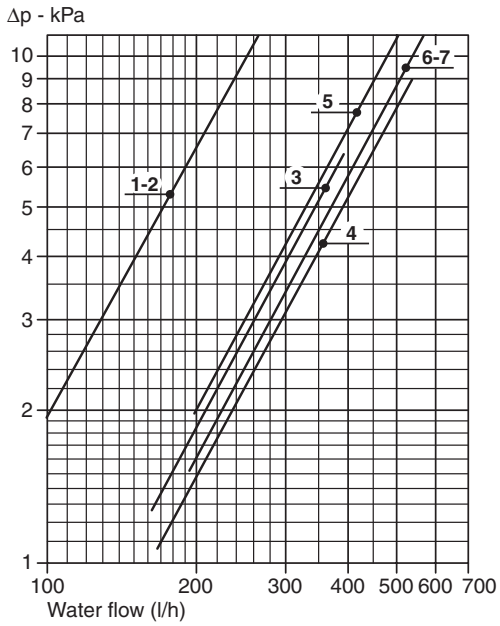


### FSC

The water pressure drop figures refer to a mean water temperature of 65°C; for different temperatures, multiply the pressure drop figures by the correction factors K.

| Tm °C | K |
|---|---|
| 40 | 1,14 |
| 50 | 1,08 |
| 60 | 1,02 |
| 70 | 0,96 |
| 80 | 0,90 |

## Heating emission graphs
## 1 row battery (supplementary battery)

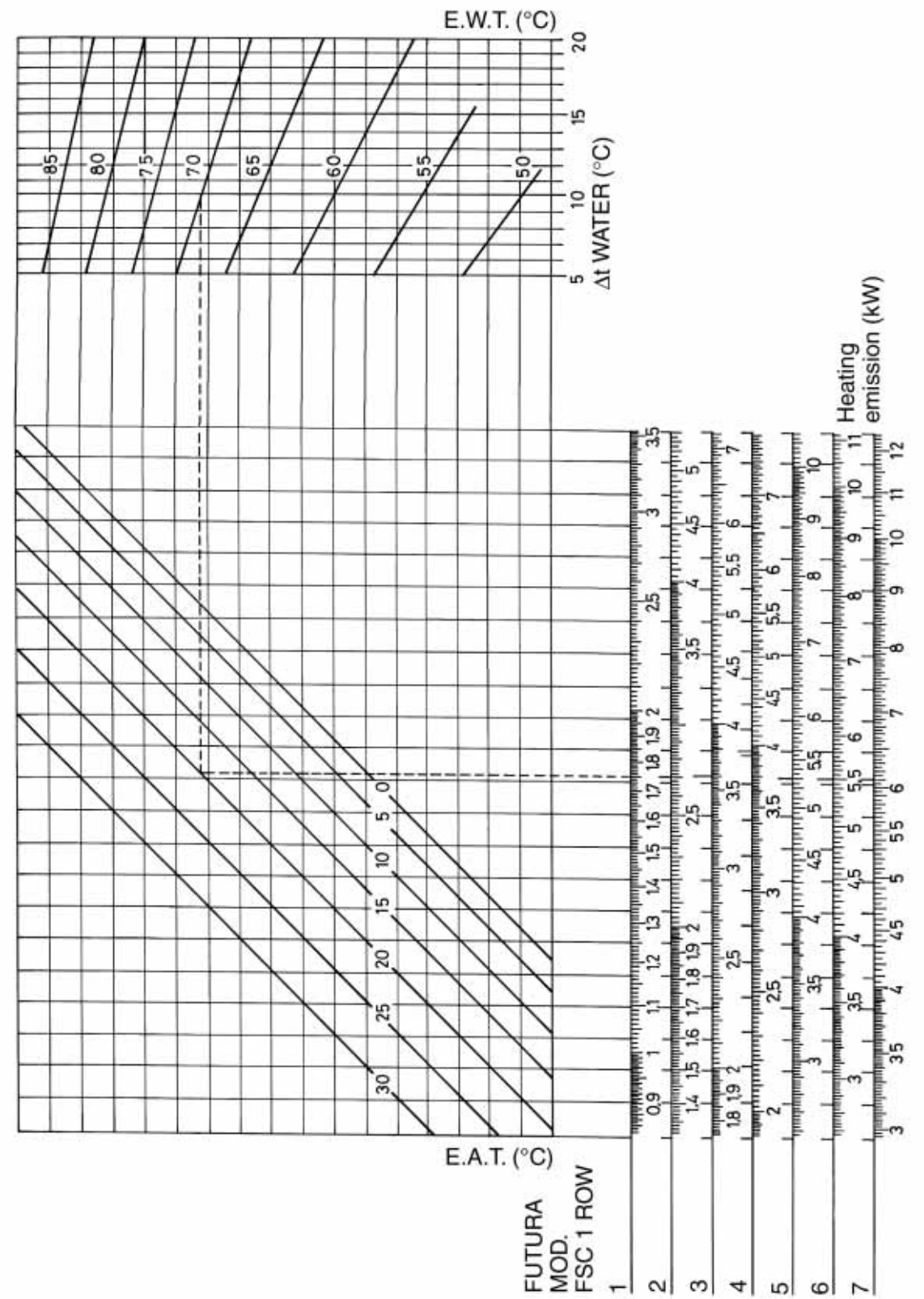


## Heating emission figures refer to high speed

Medium and low speed figures are obtained multiplying high speed figures by the following correction factors:

- **Medium speed** = 0,84
- **Low speed** = 0,70

# Construction

## Outer casing

Made from strong synthetic lateral corners and from galvanized and prepainted frontal steel sheet.
The plastic top grid has fixed louvres and is reversible in order to distribute the air in two different directions.
**Standard colours:**
- lateral corners and top grid: **Pantone 427C (light grey)**
- frontal sheet: **RAL 9003 (white)**
- other colours on request.

## Inner casing

Made from galvanized steel with closed cell insulation.

## Filter

The filtration medium is a washable polypropylene net and the filter frame is made of galvanized steel. Special plastic sliding guides allow for easy insertion and removal of the filter.

## Fan assembly

The tangential fan assembly is composed of two fan shrouds: an external one with an evolving plastic section and an internal one of holed, shaped steel. The fan has an external diameter of 120mm and is the lenght of the battery. The fins are concave and are positioned in a spiral shape along the whole lenght of the fan.

## Electric motor

The motor is wired for single-phase with three speeds and thermal protection (klixon).
The motor is secured on antivibration mountings and is fitted on the outside of the inner casing.
Protection IP 21, class B.

## Heat exchanger

It is manufactured from drawn copper tube and the aluminium fins are mechanically bonded onto the tube by an expansion process. The coil has two $^1/_2$ inch BSP internal connections and 1/8 inch BSP air vent and drain.
Flow and return pipe connections are situated at the same end on the left side looking at the unit. On request we can deliver the unit with the connections on the right end side: this must be specified on the order as this operation can not be carried out on site during installation.

## Condensate collection tray

Made from plastic with an “L” shape fitted on the inner casing.
The outside diameter of the condensate discharge pipe is 15mm.

## Controls and Accessories

See pages 44 - 64.

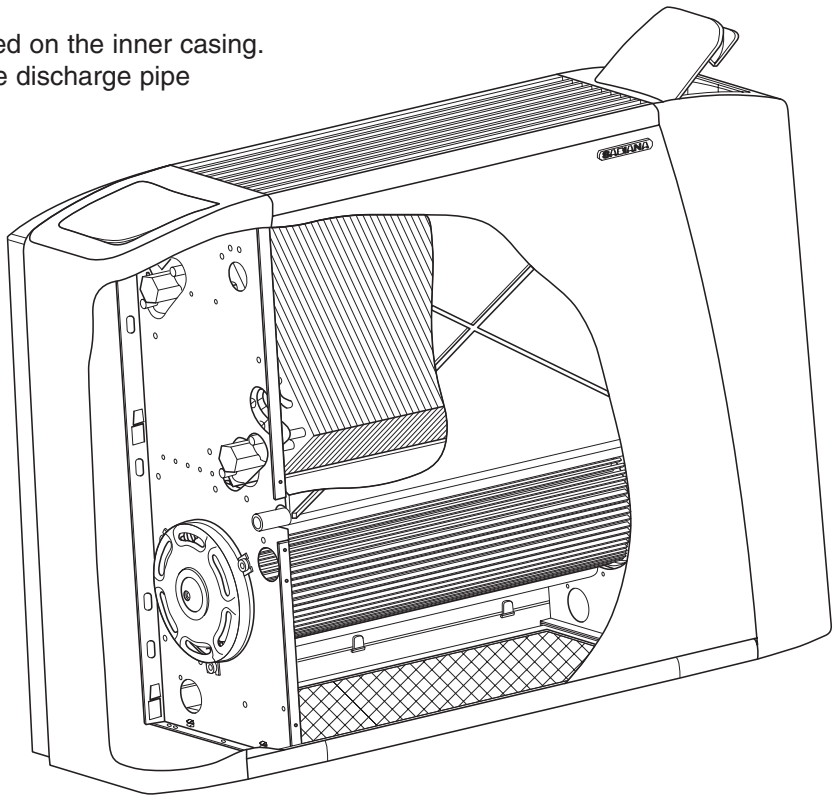

## Model styles

### **MV** MODEL

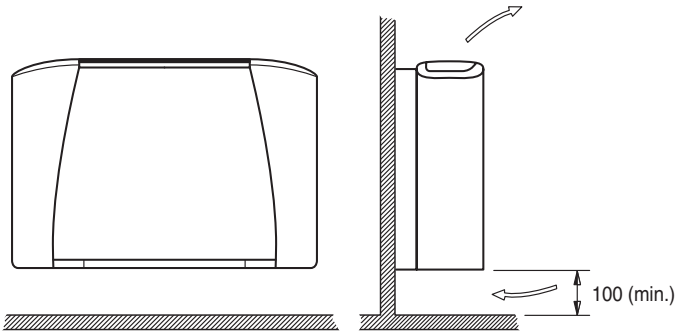


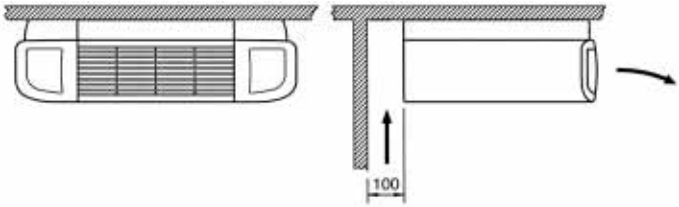


**Note:** to connect MV exposed model units to wall remote controls use the MV terminal adaptor kit Code 9060103.

### **MVB** MODEL

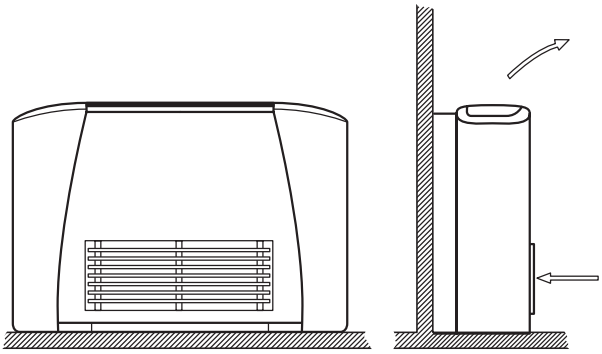

### **IV** MODEL

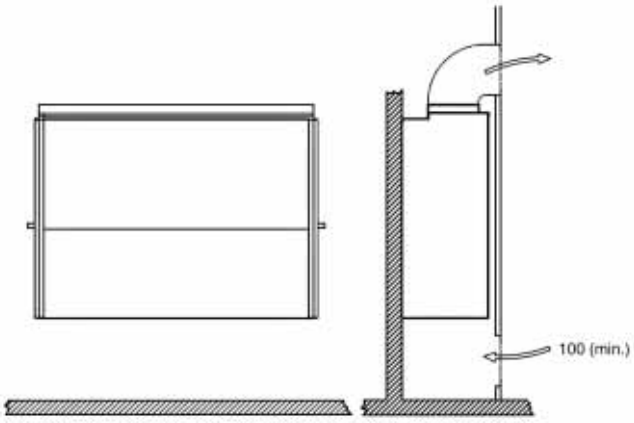


### **IO** MODEL

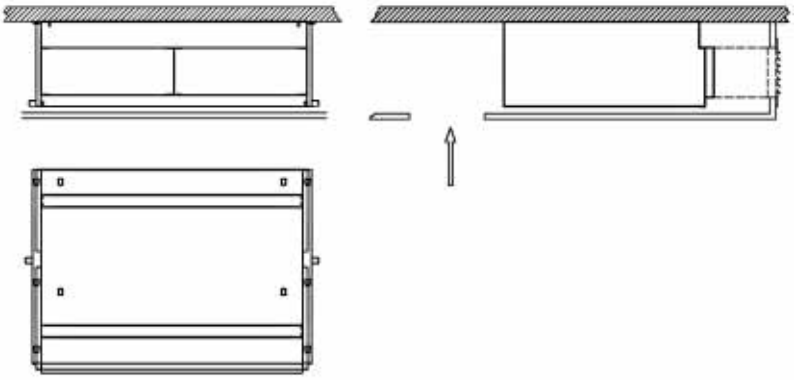

### **MO** MODEL

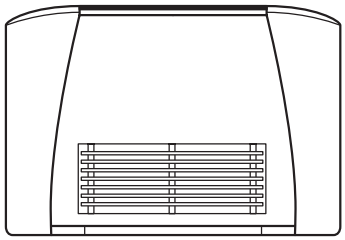

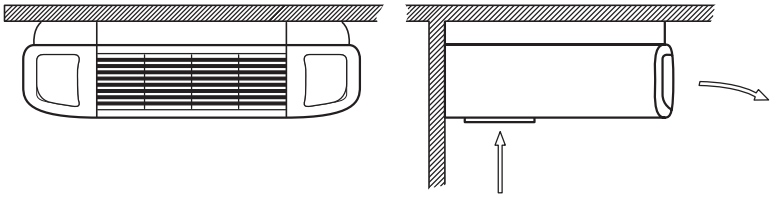

## Dimensions, Weight, Water contents

### **MV** Model

Low level exposed model

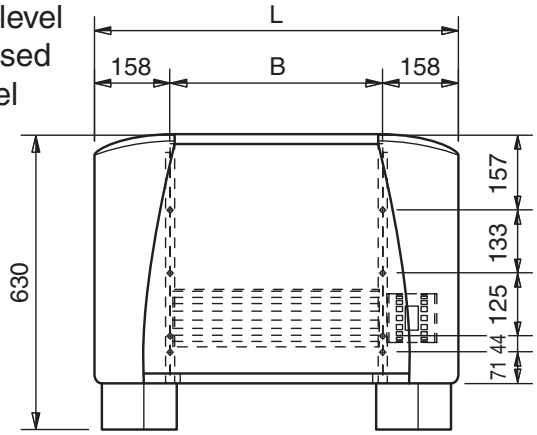


### **MVB** Model

Frontal intake low level exposed model

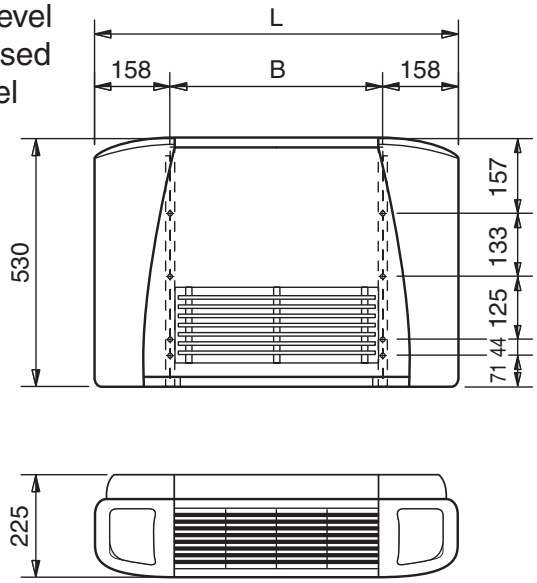


### COIL CONNECTIONS

3 or 4 ROW BATTERY

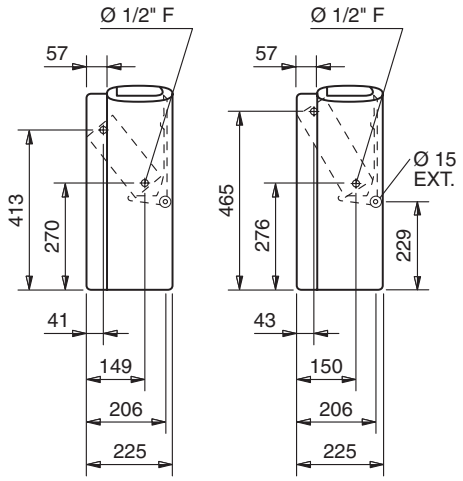


SIZE: 1 - 2 - 3 SIZE: 4 - 5

1 ROW SUPPLEMENTARY BATTERY

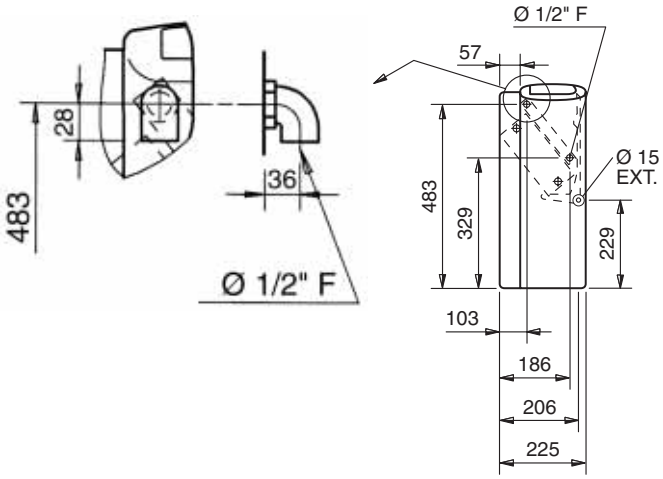


SIZE: 1 - 2 - 3 - 4 - 5

### **MO** Model

High level exposed model

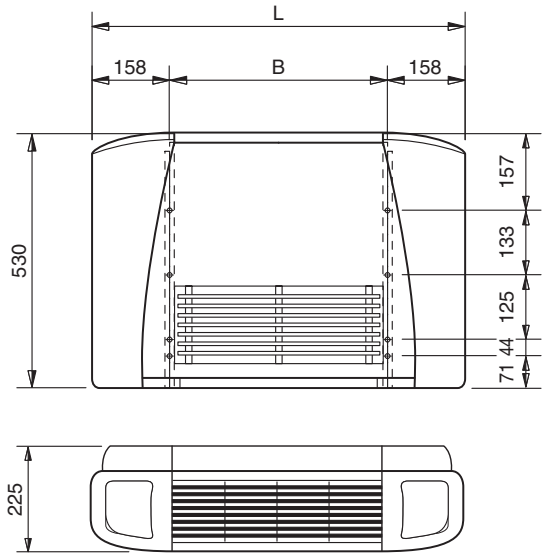


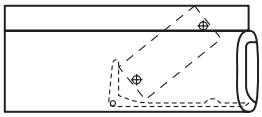

SIZE: 1 - 2 - 3

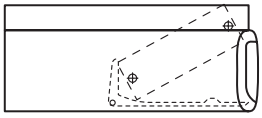

SIZE: 4 - 5

## IV - IO
Model

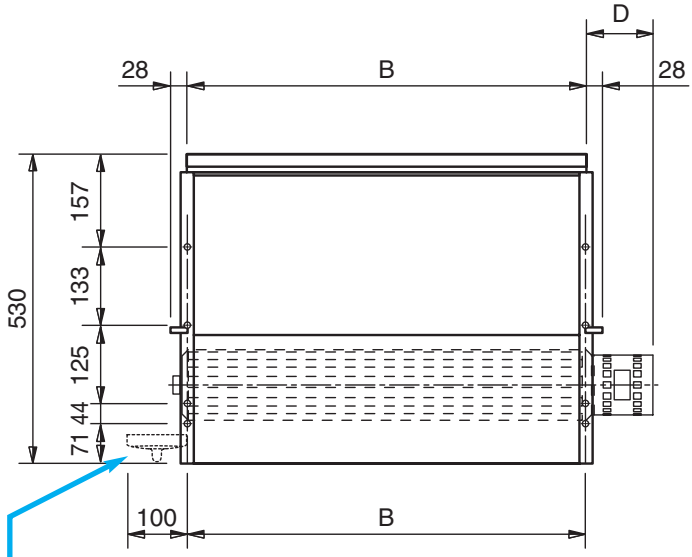


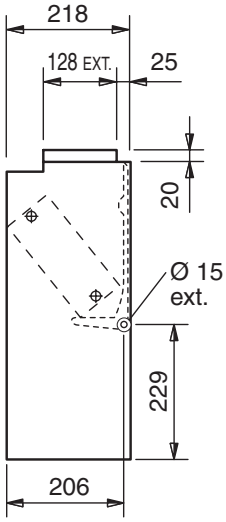


TAILLE: 1 - 2 - 3

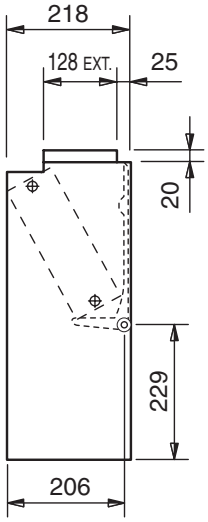


TAILLE: 4 - 5

Condensate tray (optional)

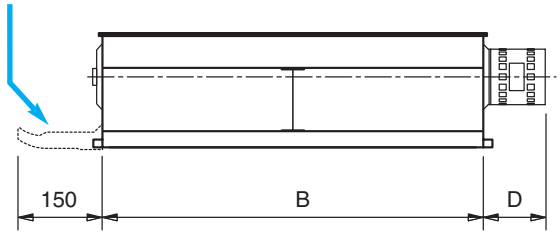


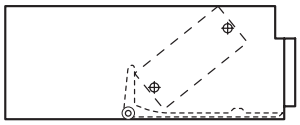

TAILLE: 1 - 2 - 3

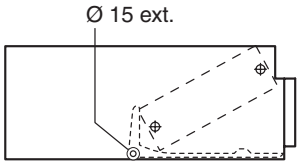


TAILLE: 4 - 5

## IV - IO Model
High level concealed model

| MODEL | 13 | 14 | 23 | 24 | 33 | 34 | 43 | 44 | 53 | 54 |
|---|---|---|---|---|---|---|---|---|---|---|
| kg | 15 | 17 | 20 | 23 | 23 | 26 | 24 | 27 | 29 | 33 |
| l * | 0.6 | 0.8 | 0.9 | 1.3 | 1.3 | 1.7 | 1.6 | 2.2 | 1.7 | 2.4 |
| B | 454 | | 669 | | 884 | | 884 | | 1099 | |
| L | 770 | | 985 | | 1200 | | 1200 | | 1415 | |
| D | 85 | | 85 | | 95 | | 95 | | 88 | |

* Coil water contents (Litres)

## FST Version

### 2 pipe units.

The following standard rating conditions are used:

**COOLING**

Entering air temperature + 27°C d.b., + 19°C w.b.
Water temperature + 7/12°C

**HEATING**

Entering air temperature + 20°C
Entering water temperature + 50°C
water flow rate as for the cooling conditions

| MODEL | | FST 13 | | | FST 23 | | | FST 33 | | | FST 43 | | | FST 53 | | |
|---|---|---|---|---|---|---|---|---|---|---|---|---|---|---|---|---|
| Speed | | 1 | 2 | 3 | 1 | 2 | 3 | 1 | 2 | 3 | 1 | 2 | 3 | 1 | 2 | 3 |
| Air flow | m³/h | 190 | 240 | 300 | 290 | 360 | 450 | 380 | 480 | 600 | 480 | 600 | 750 | 650 | 800 | 1000 |
| Cooling total emission | kW | 1,04 | 1,20 | 1,40 | 1,70 | 2,08 | 2,40 | 2,30 | 2,80 | 3,40 | 2,83 | 3,34 | 4,05 | 3,47 | 4,02 | 4,60 |
| Cooling sensible emission | kW | 0,78 | 0,92 | 1,17 | 1,31 | 1,62 | 2,02 | 1,89 | 2,30 | 2,87 | 1,91 | 2,29 | 2,99 | 2,57 | 3,14 | 3,88 |
| Heating | kW | 1,45 | 1,66 | 2,08 | 2,30 | 2,70 | 3,10 | 2,90 | 3,60 | 4,30 | 3,50 | 4,20 | 5,02 | 4,50 | 5,30 | 6,30 |
| ΔP Cooling | kPa | 2,8 | 3,7 | 4,6 | 7,0 | 9,8 | 12,0 | 6,0 | 10,0 | 13,2 | 11,0 | 14,8 | 19,7 | 16,1 | 21,4 | 27,4 |
| ΔP Heating | kPa | 2,1 | 2,9 | 3,7 | 6,2 | 8,0 | 9,8 | 6,2 | 8,4 | 11,0 | 9,2 | 12,4 | 16,4 | 15,6 | 20,5 | 26,1 |
| Fan | W | 27 | 30 | 40 | 37 | 45 | 50 | 42 | 50 | 65 | 50 | 58 | 80 | 57 | 70 | 85 |
| Sound power Lw dBA | dB(A) | 34 | 41 | 48 | 35 | 42 | 47 | 36 | 42 | 48 | 41 | 46 | 52 | 45 | 50 | 55 |
| Sound pressure Lp dBA | dB(A) | 25 | 32 | 39 | 26 | 33 | 38 | 27 | 33 | 39 | 32 | 37 | 43 | 36 | 41 | 46 |

| MODEL | | FST 14 | | | FST 24 | | | FST 34 | | | FST 44 | | | FST 54 | | |
|---|---|---|---|---|---|---|---|---|---|---|---|---|---|---|---|---|
| Speed | | 1 | 2 | 3 | 1 | 2 | 3 | 1 | 2 | 3 | 1 | 2 | 3 | 1 | 2 | 3 |
| Air flow | m³/h | 190 | 240 | 300 | 290 | 360 | 450 | 380 | 480 | 600 | 480 | 600 | 750 | 650 | 800 | 1000 |
| Cooling total emission | kW | 1,20 | 1,45 | 1,70 | 1,90 | 2,30 | 2,60 | 2,50 | 3,10 | 3,70 | 3,15 | 3,75 | 4,50 | 4,00 | 4,50 | 5,30 |
| Cooling sensible emission | kW | 0,90 | 1,15 | 1,40 | 1,34 | 1,66 | 1,99 | 1,69 | 2,08 | 2,62 | 2,34 | 2,77 | 3,52 | 3,02 | 3,61 | 4,46 |
| Heating | kW | 1,50 | 1,90 | 2,25 | 2,40 | 2,80 | 3,30 | 3,15 | 3,90 | 4,65 | 3,80 | 4,60 | 5,55 | 4,80 | 5,80 | 6,90 |
| ΔP Cooling | kPa | 4,0 | 6,0 | 8,0 | 5,7 | 7,3 | 9,2 | 11,1 | 15,0 | 20,1 | 19,7 | 26,7 | 36,6 | 11,9 | 15,6 | 20,6 |
| ΔP Heating | kPa | 3,9 | 5,4 | 7,2 | 4,7 | 6,0 | 7,6 | 10,8 | 14,8 | 20,8 | 17,8 | 24,4 | 33,4 | 10,0 | 13,2 | 17,4 |
| Fan | W | 27 | 30 | 40 | 37 | 45 | 50 | 42 | 50 | 65 | 50 | 58 | 80 | 57 | 70 | 85 |
| Sound power Lw dBA | dB(A) | 34 | 40 | 48 | 36 | 42 | 48 | 36 | 43 | 47 | 41 | 46 | 52 | 47 | 51 | 56 |
| Sound pressure Lp dBA | dB(A) | 25 | 31 | 39 | 27 | 33 | 39 | 27 | 34 | 38 | 32 | 37 | 43 | 38 | 42 | 47 |

### 4 pipe units.

The following standard rating conditions are used:

**COOLING**

Entering air temperature + 27°C d.b., + 19°C w.b.
Water temperature + 7/12°C

**HEATING**

Entering air temperature + 20°C
Water temperature + 70/60°C

| MODEL | | FST 13+1 | | | FST 23+1 | | | FST 33+1 | | | FST 43+1 | | | FST 53+1 | | |
|---|---|---|---|---|---|---|---|---|---|---|---|---|---|---|---|---|
| Speed | | 1 | 2 | 3 | 1 | 2 | 3 | 1 | 2 | 3 | 1 | 2 | 3 | 1 | 2 | 3 |
| Air flow | m³/h | 190 | 240 | 300 | 290 | 360 | 450 | 380 | 480 | 600 | 480 | 600 | 750 | 650 | 800 | 1000 |
| Cooling total emission | kW | 1,04 | 1,20 | 1,40 | 1,70 | 2,08 | 2,40 | 2,30 | 2,80 | 3,40 | 2,83 | 3,34 | 4,05 | 3,17 | 3,67 | 4,20 |
| Cooling sensible emission | kW | 0,78 | 0,92 | 1,17 | 1,10 | 1,36 | 1,70 | 1,70 | 2,07 | 2,59 | 1,91 | 2,29 | 2,99 | 2,28 | 2,79 | 3,45 |
| Heating | kW | 1,05 | 1,18 | 1,44 | 1,95 | 2,25 | 2,60 | 2,45 | 3,00 | 3,50 | 3,00 | 3,40 | 3,95 | 3,28 | 3,80 | 4,40 |
| ΔP Cooling | kPa | 3,4 | 4,6 | 5,7 | 8,5 | 11,8 | 14,5 | 7,7 | 10,5 | 13,9 | 11,0 | 14,8 | 19,7 | 12,4 | 16,1 | 20,6 |
| ΔP Heating | kPa | 1,4 | 1,8 | 2,4 | 5,4 | 6,9 | 8,9 | 2,1 | 2,9 | 3,7 | 2,7 | 3,5 | 4,4 | 3,3 | 4,3 | 5,4 |
| Fan | W | 27 | 30 | 40 | 37 | 45 | 50 | 42 | 50 | 65 | 50 | 58 | 80 | 57 | 70 | 85 |
| Sound power Lw dBA | dB(A) | 34 | 41 | 48 | 36 | 42 | 47 | 39 | 43 | 48 | 43 | 48 | 54 | 44 | 48 | 54 |
| Sound pressure Lp dBA | dB(A) | 25 | 32 | 39 | 27 | 33 | 38 | 30 | 34 | 39 | 34 | 39 | 45 | 35 | 39 | 45 |

The sound pressure levels apply to the reverberant field of a 100 m³ room and a reverberation time of 0.5 sec.

## Operation limits

Highest water inlet temperature..... + 85°C
Lowest water inlet temperature..... + 5°C
Highest working pressure..... 8 bar

**Note:** For MO model the maximum installation height is 2,8 m.
On heating it must be payed attention to rooms where the floor temperature is particularly low (for example less than 5°C).
In this situation the floor can cool the lower layer of air to a level that can stop the uniform diffusion of the hot air coming from the unit.

Water flow limits for 3 row battery (l/h)

| MODEL | FST 13 | FST 23 | FST 33 | FST 43 | FST 53 |
|---|---|---|---|---|---|
| Lowest | 100 | 150 | 150 | 200 | 250 |
| Highest | 500 | 750 | 1000 | 1000 | 1500 |

Water flow limits for 4 row battery (l/h)

| MODEL | FST 14 | FST 24 | FST 34 | FST 44 | FST 54 |
|---|---|---|---|---|---|
| Lowest | 100 | 150 | 200 | 250 | 300 |
| Highest | 750 | 1000 | 1000 | 1500 | 2000 |

Water flow limits for 1 row battery (l/h)

| MODEL | FST 13+1<br>FST 14+1 | FST 23+1<br>FST 24+1 | FST 33+1<br>FST 34+1 | FST 43+1<br>FST 44+1 | FST 53+1<br>FST 54+1 |
|---|---|---|---|---|---|
| Lowest | 60 | 80 | 100 | 130 | 160 |
| Highest | 250 | 350 | 450 | 500 | 650 |

## Motor electrical data

| MODEL | | FST 13 (+1)<br>FST 14 (+1) | FST 23 (+1)<br>FST 24 (+1) | FST 33 (+1)<br>FST 34 (+1) | FST 43 (+1)<br>FST 44 (+1) | FST 53 (+1)<br>FST 54 (+1) |
|---|---|---|---|---|---|---|
| 230/1<br>50Hz | W | 38 | 40 | 60 | 70 | 85 |
| | A | 0,15 | 0,16 | 0,20 | 0,27 | 0,35 |
| | µF | 1 | 1,5 | 1,25 | 2 | 1,5 |

### Emission (k) and air flow (Q) correction factors at high speed in accordance to the requested available pressure (Δp).

| SIZE | | FST 1 | FST 2 | FST 3 | FST 4 | FST 5 |
|---|---|---|---|---|---|---|
| ΔP 05 Pa | Q=m³/h | 270 | 410 | 560 | 700 | 950 |
| | (W) · k | 0.95 | 0.94 | 0.94 | 0.95 | 0.96 |
| ΔP 10 Pa | Q=m³/h | 250 | 370 | 520 | 650 | 900 |
| | (W) · k | 0.87 | 0.85 | 0.88 | 0.87 | 0.87 |
| ΔP 15 Pa | Q=m³/h | 220 | 340 | 470 | 600 | 800 |
| | (W) · k | 0.80 | 0.83 | 0.82 | 0.81 | 0.83 |

## Cooling emission
## 3 row battery

**E.A.T. °C: dry bulb + 27, wet bulb + 19**

| MODEL | Speed | Air flow m³/h m³/sec. | EWT 5 - LWT 10°C | | | EWT 7 - LWT 12°C | | | EWT 12 - LWT 17°C | | |
|---|---|---|---|---|---|---|---|---|---|---|---|
| | | | Water flow l/h | Emission Tot. Watt | Emission Sen. Watt | Water flow l/h | Emission Tot. Watt | Emission Sen. Watt | Water flow l/h | Emission Tot. Watt | Emission Sen. Watt |
| FST 13 | High | 300 0,08 | 320 | 1870 | 1400 | 240 | 1400 | 1170 | 130 | 760 | 760 |
| | Medium | 240 0,07 | 260 | 1520 | 1130 | 210 | 1200 | 920 | 110 | 650 | 650 |
| | Low | 190 0,05 | 230 | 1320 | 950 | 180 | 1040 | 780 | 100 | 570 | 570 |
| FST 23 | High | 450 0,12 | 545 | 3150 | 2300 | 415 | 2400 | 2020 | 225 | 1310 | 1310 |
| | Medium | 360 0,10 | 455 | 2630 | 1930 | 360 | 2080 | 1620 | 195 | 1130 | 1130 |
| | Low | 290 0,08 | 390 | 2270 | 1540 | 295 | 1700 | 1310 | 160 | 930 | 930 |
| FST 33 | High | 600 0,17 | 770 | 4450 | 3450 | 590 | 3400 | 2870 | 320 | 1850 | 1850 |
| | Medium | 480 0,13 | 610 | 3540 | 2620 | 485 | 2800 | 2300 | 265 | 1530 | 1530 |
| | Low | 380 0,10 | 550 | 3200 | 2200 | 400 | 2300 | 1890 | 215 | 1250 | 1250 |
| FST 43 | High | 750 0,21 | 915 | 5300 | 4080 | 700 | 4050 | 2990 | 380 | 2210 | 2210 |
| | Medium | 600 0,17 | 740 | 4500 | 3160 | 580 | 3340 | 2290 | 315 | 1820 | 1820 |
| | Low | 480 0,13 | 650 | 3800 | 2600 | 490 | 2830 | 1910 | 265 | 1540 | 1540 |
| FST 53 | High | 1000 0,28 | 1055 | 6100 | 4670 | 795 | 4600 | 3880 | 435 | 2510 | 2510 |
| | Medium | 800 0,22 | 880 | 5090 | 3820 | 695 | 4020 | 3140 | 380 | 2190 | 2190 |
| | Low | 650 0,18 | 760 | 4390 | 3200 | 600 | 3470 | 2570 | 325 | 1890 | 1890 |

Correction factors for different entering air temperatures

| E.A.T. C° | K |
|---|---|
| 28/20 | 1,14 |
| 26/18,5 | 0,93 |
| 25/18 | 0,84 |

## Cooling emission graphs
## 3 row battery

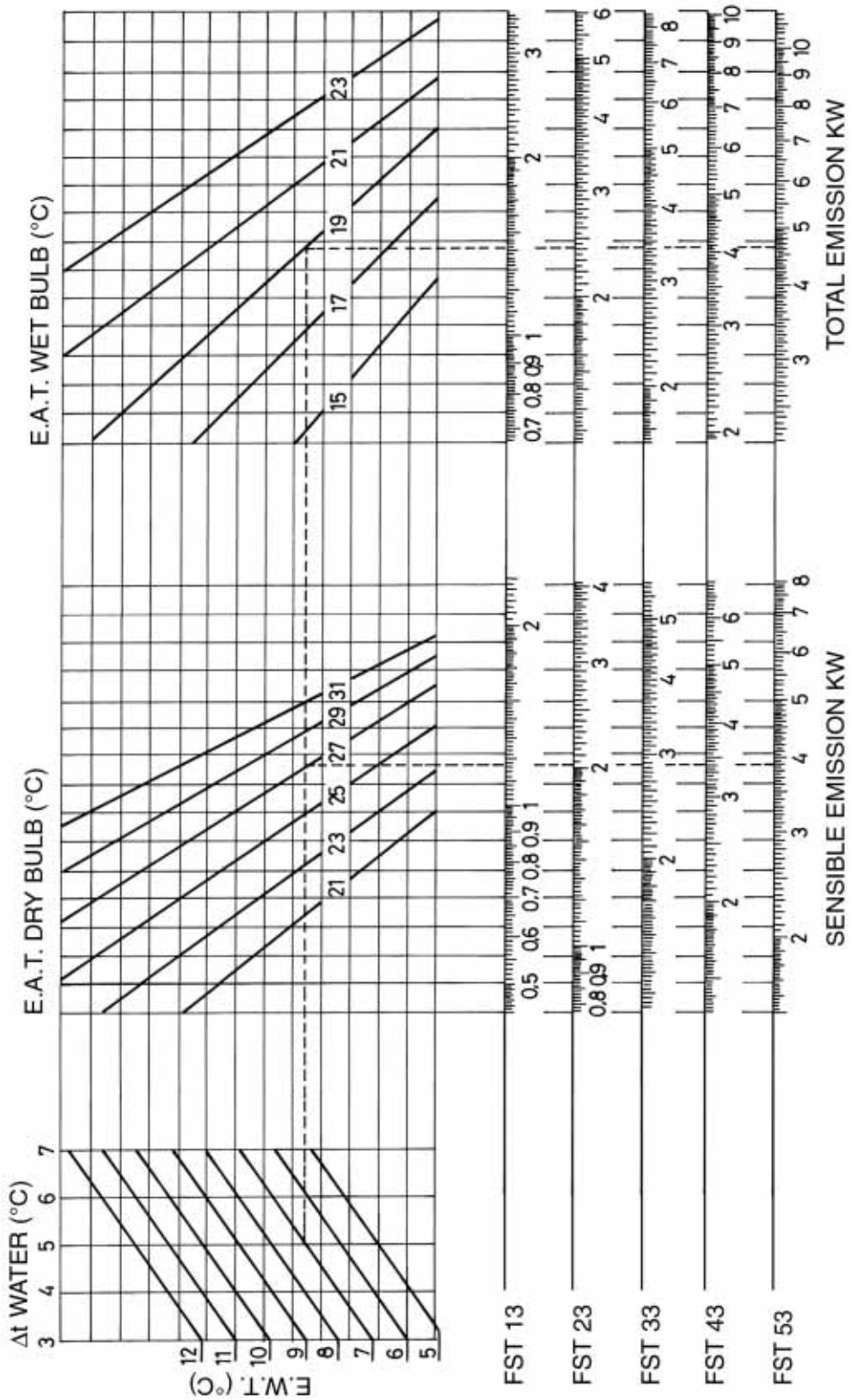


## Cooling output figures refer to high speed

Medium and low speed figures are obtained multiplying high speed figures by the following correction factors:

- **Medium speed** TOTAL K = 0,85 SENSIBLE K = 0,80
- **Low speed** TOTAL K = 0,72 SENSIBLE K = 0,66

**ATTENTION:**
A sensible heat figure higher than a total heat figure shows that the cooling is obtained without dehumidification, therefore the emission to refer to is the sensible one.

## Cooling emission
## 4 row battery

**E.A.T. °C: dry bulb + 27, wet bulb + 19**

| MODEL | Speed | Air flow m³/h m³/sec. | EWT 5 - LWT 10°C Water flow l/h | EWT 5 - LWT 10°C Emission Tot. Watt | EWT 5 - LWT 10°C Emission Sen. Watt | EWT 7 - LWT 12°C Water flow l/h | EWT 7 - LWT 12°C Emission Tot. Watt | EWT 7 - LWT 12°C Emission Sen. Watt | EWT 12 - LWT 17°C Water flow l/h | EWT 12 - LWT 17°C Emission Tot. Watt | EWT 12 - LWT 17°C Emission Sen. Watt |
|---|---|---|---|---|---|---|---|---|---|---|---|
| FST 14 | High | 300 0,08 | 375 | 2180 | 1660 | 295 | 1700 | 1400 | 160 | 940 | 940 |
| | Medium | 240 0,07 | 315 | 1830 | 1340 | 250 | 1450 | 1150 | 135 | 790 | 790 |
| | Low | 190 0,05 | 260 | 1520 | 1090 | 210 | 1200 | 900 | 110 | 650 | 650 |
| FST 24 | High | 450 0,12 | 580 | 3350 | 2550 | 450 | 2600 | 1990 | 250 | 1450 | 1450 |
| | Medium | 360 0,10 | 500 | 2910 | 2150 | 400 | 2300 | 1660 | 215 | 1250 | 1250 |
| | Low | 290 0,08 | 415 | 2400 | 1710 | 330 | 1900 | 1340 | 180 | 1040 | 1040 |
| FST 34 | High | 600 0,17 | 815 | 4720 | 3520 | 640 | 3700 | 2620 | 355 | 2050 | 2050 |
| | Medium | 480 0,13 | 680 | 3920 | 2750 | 535 | 3100 | 2080 | 290 | 1690 | 1690 |
| | Low | 380 0,10 | 545 | 3160 | 2160 | 430 | 2500 | 1690 | 235 | 1360 | 1360 |
| FST 44 | High | 750 0,21 | 1000 | 5790 | 4450 | 780 | 4500 | 3520 | 430 | 2500 | 2500 |
| | Medium | 600 0,17 | 820 | 4740 | 3460 | 650 | 3750 | 2770 | 350 | 2040 | 2040 |
| | Low | 480 0,13 | 690 | 3980 | 2840 | 545 | 3150 | 2340 | 300 | 1720 | 1720 |
| FST 54 | High | 1000 0,28 | 1175 | 6800 | 5300 | 915 | 5300 | 4460 | 505 | 2930 | 2930 |
| | Medium | 800 0,22 | 985 | 5690 | 4250 | 780 | 4500 | 3610 | 425 | 2450 | 2450 |
| | Low | 650 0,18 | 875 | 5060 | 3680 | 690 | 4000 | 3020 | 375 | 2180 | 2180 |

Correction factors for different entering air temperatures

| E.A.T. C° | K |
|---|---|
| 28/20 | 1,14 |
| 26/18,5 | 0,93 |
| 25/18 | 0,84 |

## Cooling emission graphs
## 4 row battery

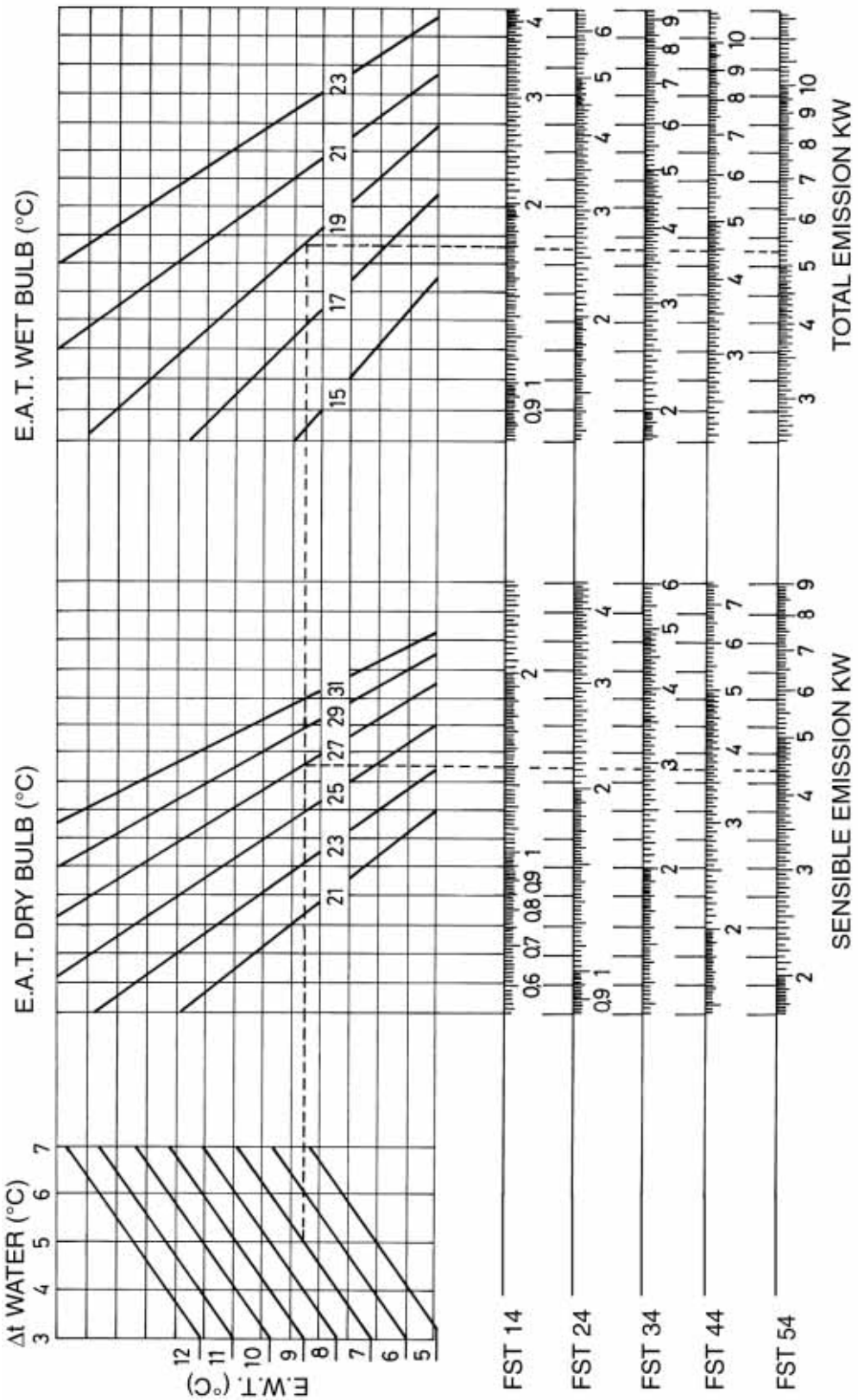


## Cooling output figures refer to high speed

Medium and low speed figures are obtained multiplying high speed figures by the following correction factors:

- **Medium speed** TOTAL K = 0,85 SENSIBLE K = 0,80
- **Low speed** TOTAL K = 0,72 SENSIBLE K = 0,66

**ATTENTION:**
A sensible heat figure higher than a total heat figure shows that the cooling is obtained without dehumidification, therefore the emission to refer to is the sensible one.

## Heating emission
## E.A.T. °C: 20

| SIZE | Speed | Air flow m³/h m³/sec. | 3 row battery EWT 50 - LWT 40°C Water flow l/h | 3 row battery EWT 50 - LWT 40°C Emission Watt | 3 row battery EWT 70 - LWT 60°C Water flow l/h | 3 row battery EWT 70 - LWT 60°C Emission Watt | 3 row battery EWT 85 - LWT 75°C Water flow l/h | 3 row battery EWT 85 - LWT 75°C Emission Watt | 4 row battery EWT 50 - LWT 40°C Water flow l/h | 4 row battery EWT 50 - LWT 40°C Emission Watt | 4 row battery EWT 70 - LWT 60°C Water flow l/h | 4 row battery EWT 70 - LWT 60°C Emission Watt | 4 row battery EWT 85 - LWT 75°C Water flow l/h | 4 row battery EWT 85 - LWT 75°C Emission Watt |
|---|---|---|---|---|---|---|---|---|---|---|---|---|---|---|
| 1 | High | 300 0,08 | 155 | 1770 | 295 | 3400 | 385 | 4470 | 170 | 1980 | 330 | 3800 | 435 | 5050 |
| | Medium | 240 0,07 | 120 | 1400 | 245 | 2850 | 320 | 3700 | 145 | 1700 | 280 | 3250 | 365 | 4200 |
| | Low | 190 0,05 | 110 | 1250 | 210 | 2400 | 270 | 3100 | 115 | 1350 | 230 | 2650 | 295 | 3400 |
| 2 | High | 450 0,12 | 250 | 2880 | 475 | 5500 | 625 | 7250 | 260 | 3000 | 500 | 5800 | 660 | 7650 |
| | Medium | 360 0,10 | 200 | 2300 | 390 | 4500 | 500 | 5800 | 225 | 2600 | 435 | 5050 | 570 | 6600 |
| | Low | 290 0,08 | 175 | 2000 | 330 | 3800 | 430 | 4950 | 190 | 2200 | 365 | 4200 | 465 | 5400 |
| 3 | High | 600 0,17 | 335 | 3880 | 640 | 7400 | 845 | 9750 | 360 | 4130 | 690 | 8000 | 935 | 10800 |
| | Medium | 480 0,13 | 270 | 3150 | 535 | 6200 | 700 | 8100 | 295 | 3400 | 575 | 6650 | 780 | 9000 |
| | Low | 380 0,10 | 225 | 2600 | 435 | 5050 | 565 | 6550 | 240 | 2750 | 460 | 5300 | 605 | 7000 |
| 4 | High | 750 0,21 | 395 | 4550 | 745 | 8650 | 985 | 11400 | 430 | 5000 | 830 | 9600 | 1090 | 12600 |
| | Medium | 600 0,17 | 320 | 3700 | 625 | 7200 | 810 | 9400 | 355 | 4100 | 690 | 8000 | 910 | 10500 |
| | Low | 480 0,13 | 270 | 3150 | 525 | 6100 | 680 | 7900 | 295 | 3400 | 575 | 6650 | 780 | 9000 |
| 5 | High | 1000 0,28 | 495 | 5750 | 950 | 11000 | 1255 | 14500 | 550 | 6400 | 1060 | 12250 | 1425 | 16500 |
| | Medium | 800 0,22 | 410 | 4750 | 785 | 9100 | 1030 | 11900 | 460 | 5300 | 895 | 10350 | 1210 | 14000 |
| | Low | 650 0,18 | 345 | 4000 | 675 | 7800 | 880 | 10200 | 385 | 4450 | 745 | 8650 | 995 | 11500 |

Correction factors for different entering air temperatures

| W.T. C° | E.A.T., C° 22 | 18 | 16 | 14 |
|---|---|---|---|---|
| **50/40** | 0,91 | 1,09 | 1,15 | 1,23 |
| **70/60** | 0,95 | 1,05 | 1,09 | 1,13 |
| **85/75** | 0,96 | 1,04 | 1,07 | 1,11 |

## Water pressure drop

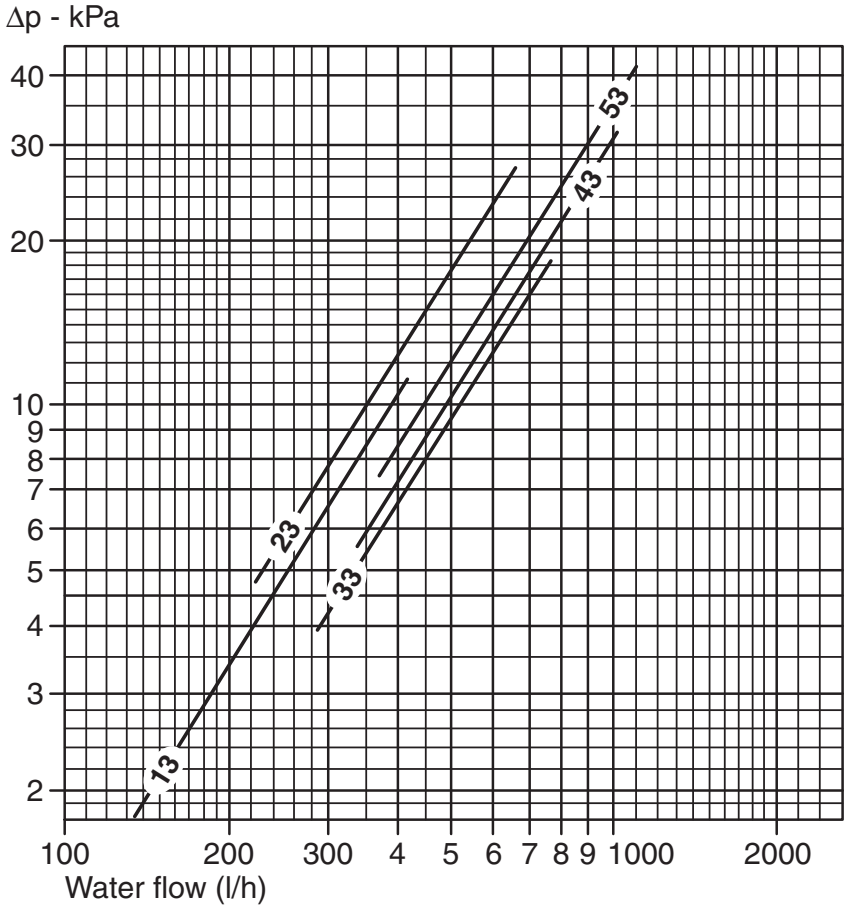


**FST**
3 ROWS

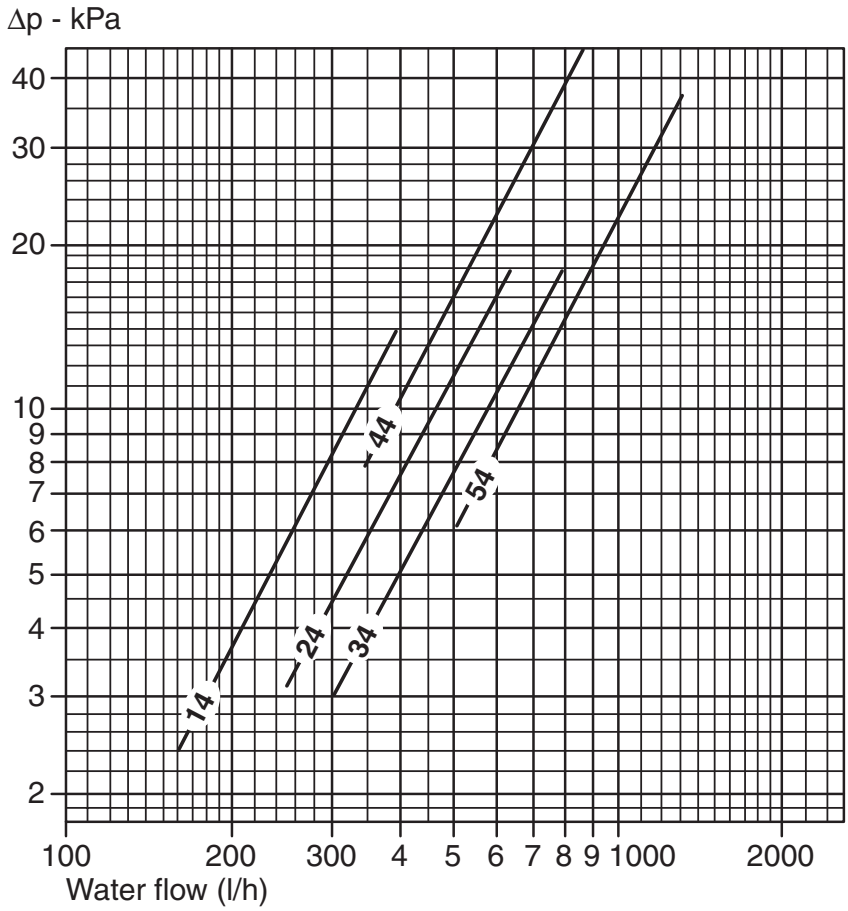


**FST**
4 ROWS

The water pressure drop figures refer to a mean water temperature of 10°C; for different temperature, multiply the pressure drop figures by the correction factors K.

| °C | K |
|---|---|
| 20 | 0,94 |
| 30 | 0,90 |
| 40 | 0,86 |
| 50 | 0,82 |
| 60 | 0,78 |
| 70 | 0,74 |
| 80 | 0,70 |

## Heating emission graphs
## 3 row battery

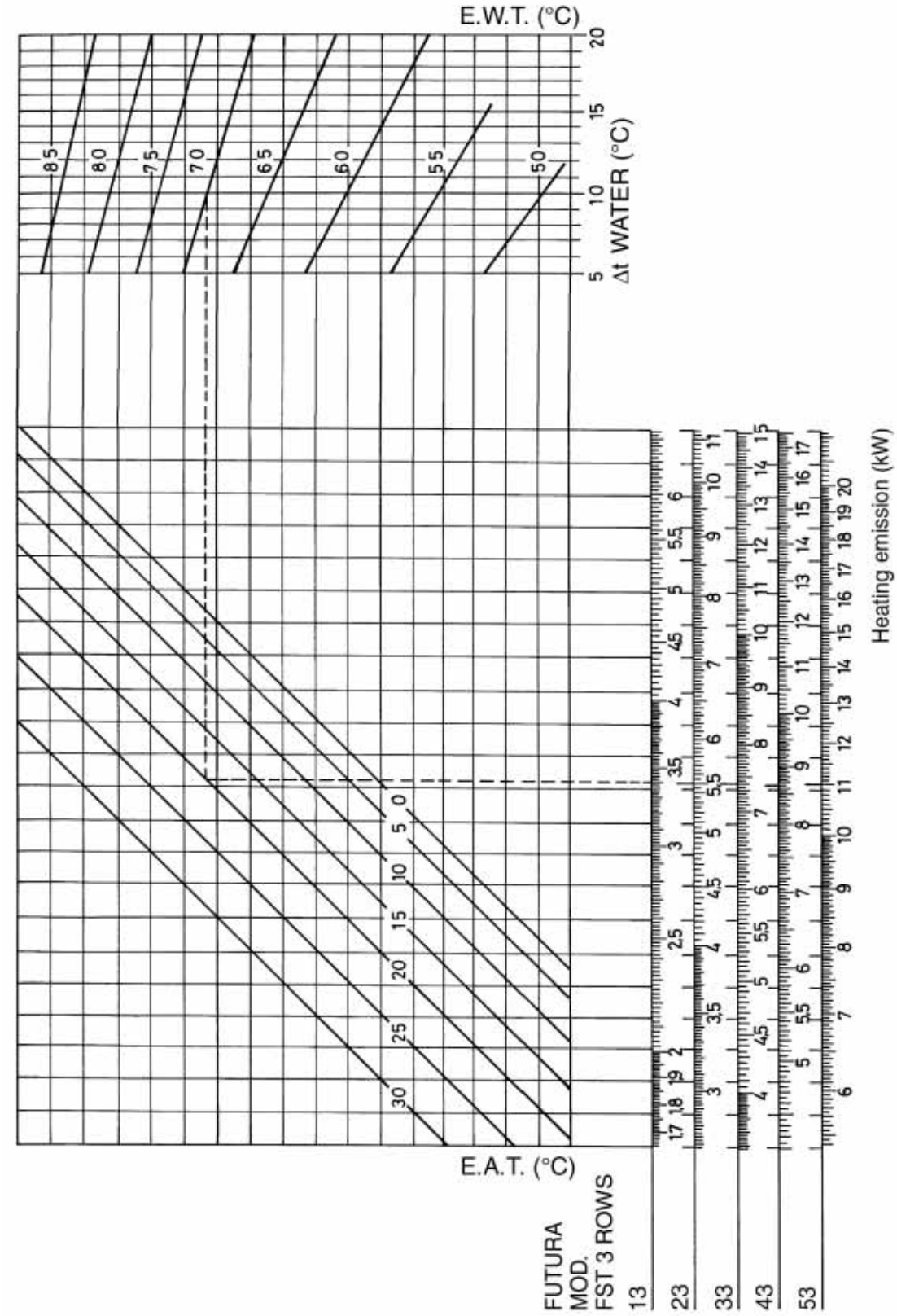


## Heating emission figures refer to high speed

Medium and low speed figures are obtained multiplying high speed figures by the following correction factors:

- **Medium speed** = 0,84
- **Low speed** = 0,70

## Heating emission graphs
## 4 row battery

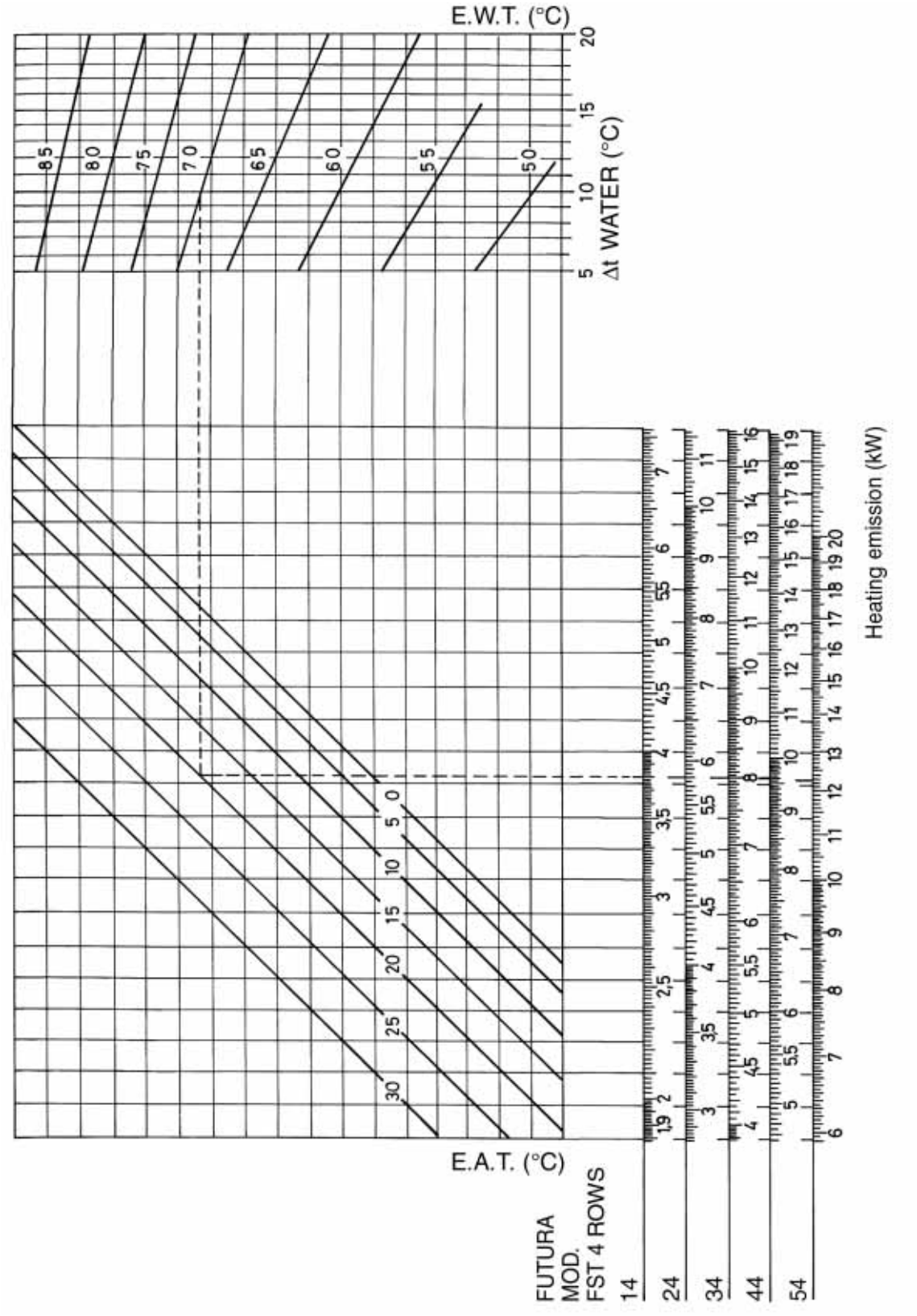


## Heating emission figures refer to high speed

Medium and low speed figures are obtained multiplying high speed figures by the following correction factors:

- **Medium speed** = 0,84
- **Low speed** = 0,70

## Heating emission
## 1 row battery (supplementary battery)

**E.A.T. °C: 20**

| SIZE | Speed | Air flow m³/h m³/sec. | EWT 50 - LWT 40°C Water flow l/h | EWT 50 - LWT 40°C Emission Watt | EWT 70 - LWT 60°C Water flow l/h | EWT 70 - LWT 60°C Emission Watt | EWT 85 - LWT 75°C Water flow l/h | EWT 85 - LWT 75°C Emission Watt |
|---|---|---|---|---|---|---|---|---|
| 1 | High | 300 0,08 | 75 | 860 | 145 | 1440 | 190 | 2200 |
| | Medium | 240 0,07 | 60 | 680 | 120 | 1180 | 150 | 1750 |
| | Low | 190 0,05 | 55 | 630 | 105 | 1050 | 135 | 1550 |
| 2 | High | 450 0,12 | 120 | 1360 | 225 | 2600 | 300 | 3450 |
| | Medium | 360 0,10 | 100 | 1160 | 195 | 2250 | 260 | 2970 |
| | Low | 290 0,08 | 90 | 1020 | 170 | 1950 | 225 | 2580 |
| 3 | High | 600 0,17 | 155 | 1820 | 300 | 3500 | 400 | 4650 |
| | Medium | 480 0,13 | 135 | 1550 | 260 | 3000 | 340 | 3900 |
| | Low | 380 0,10 | 120 | 1360 | 210 | 2450 | 290 | 3360 |
| 4 | High | 750 0,21 | 180 | 2060 | 340 | 3950 | 455 | 5250 |
| | Medium | 600 0,17 | 150 | 1750 | 295 | 3400 | 390 | 4500 |
| | Low | 480 0,13 | 135 | 1550 | 260 | 3000 | 340 | 3940 |
| 5 | High | 1000 0,28 | 230 | 2570 | 380 | 4400 | 585 | 6750 |
| | Medium | 800 0,22 | 200 | 2280 | 330 | 3800 | 490 | 5700 |
| | Low | 650 0,18 | 170 | 1940 | 280 | 3280 | 425 | 4900 |

Correction factors for different entering air temperatures

| W.T. °C | E.A.T., °C 22 | 18 | 16 | 14 |
|---|---|---|---|---|
| **50/40** | 0,91 | 1,09 | 1,15 | 1,23 |
| **70/60** | 0,95 | 1,05 | 1,09 | 1,13 |
| **85/75** | 0,96 | 1,04 | 1,07 | 1,11 |

## Water pressure drop
## 1 row battery

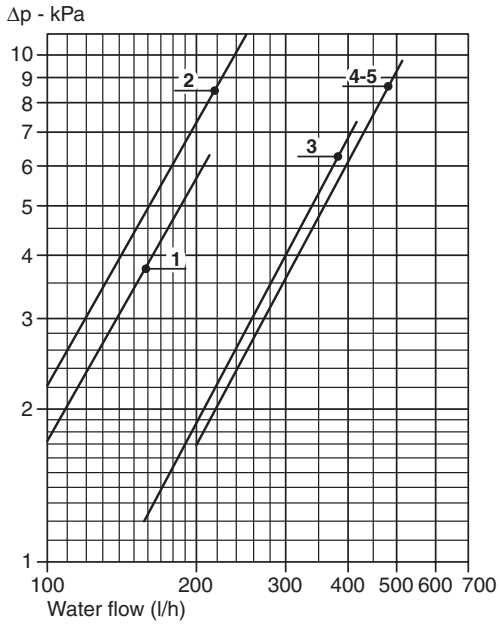


**FST**

The water pressure drop figures refer to a mean water temperature of 65°C; for different temperatures, multiply the pressure drop figures by the correction factors K.

| Tm °C | K |
|---|---|
| 40 | 1,14 |
| 50 | 1,08 |
| 60 | 1,02 |
| 70 | 0,96 |
| 80 | 0,90 |

## Heating emission graphs
## 1 row battery (supplementary battery)

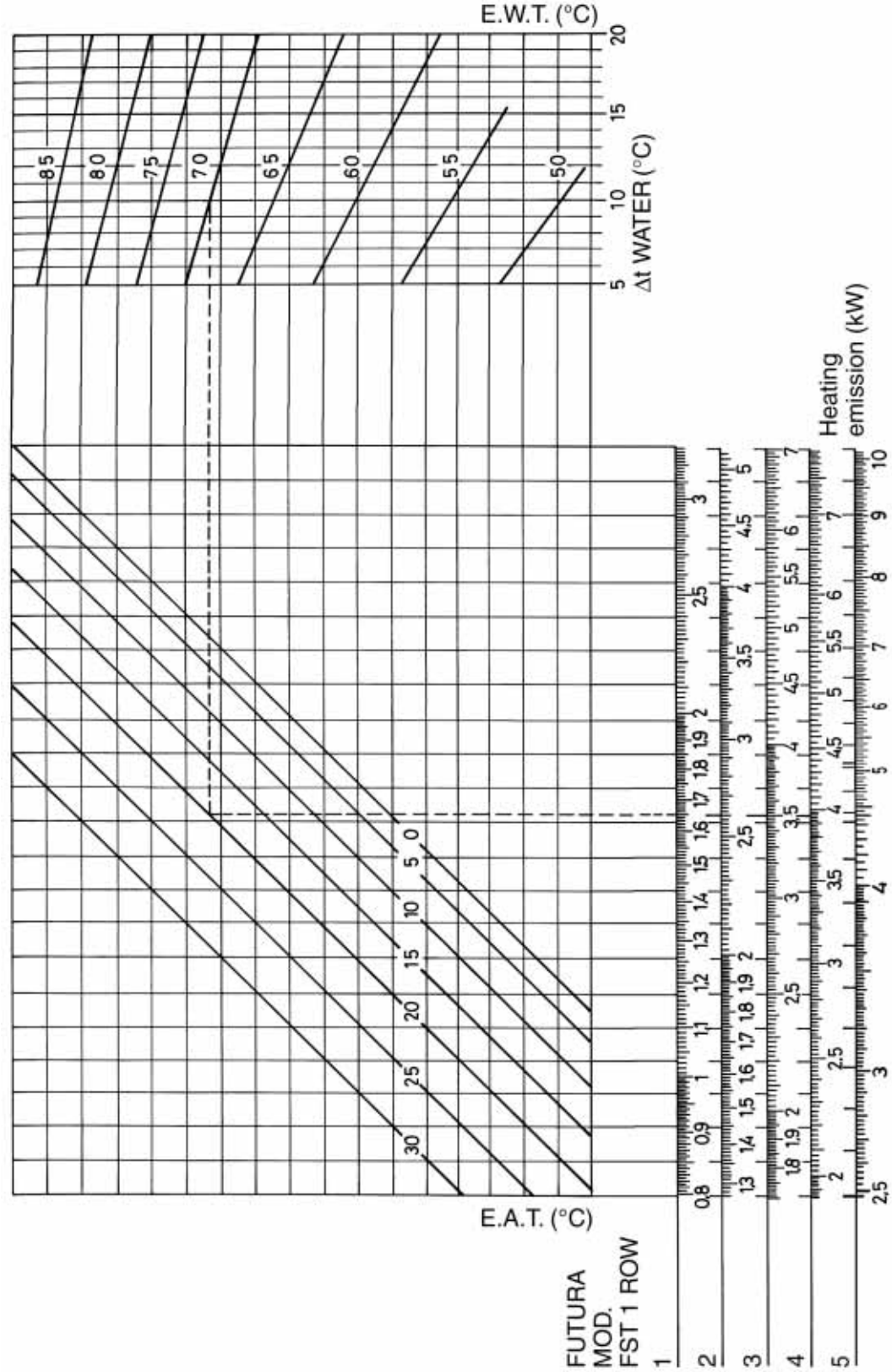


## Heating emission figures refer to high speed

Medium and low speed figures are obtained multiplying high speed figures by the following correction factors:

- **Medium speed** = 0,84
- **Low speed** = 0,70

## Fan coil with tangential fan

**Easy use**

**Attention to details**


**Depht: 183 mm only**

# Construction

## Outer casing

Made from strong synthetic lateral corners and from galvanized and prepainted frontal steel sheet.
The plastic top grid has fixed louvres and is reversible in order to distribute the air in two different directions.
**Standard colours:**
- lateral corners and top grid: **Pantone 427C (light grey)**
- frontal sheet: **RAL 9003 (white)**
- other colours on request.

## Inner casing

Made from galvanized steel with closed cell insulation.

## Filter

The filtration medium is a washable polypropylene net and the filter frame is made of galvanized steel. Special plastic sliding guides allow for easy insertion and removal of the filter.

## Fan assembly

The tangential fan assembly is composed of two fan shrouds: an external one with an evolving plastic section and an internal one of holed, shaped steel. The fan has an external diameter of 120mm and is the lenght of the battery. The fins are concave and are positioned in a spiral shape along the whole lenght of the fan.

## Electric motor

The motor is wired for single-phase with three speeds and thermal protection (klixon).
The motor is secured on antivibration mountings and is fitted on the outside of the inner casing.
Protection IP 21, class B.

## Heat exchanger

It is manufactured from drawn copper tube and the aluminium fins are mechanically bonded onto the tube by an expansion process. The coil has two $^1/_2$ inch BSP internal connections and 1/8 inch BSP air vent and drain.
Flow and return pipe connections are situated at the same end on the left side looking at the unit. On request we can deliver the unit with the connections on the right end side: this must be specified on the order as this operation can not be carried out on site during installation.

## Condensate collection tray

Made from plastic with an “L” shape fitted on the inner casing.
The outside diameter of the condensate discharge pipe is 15mm.

## Controls and Accessories

See pages 44 - 64.

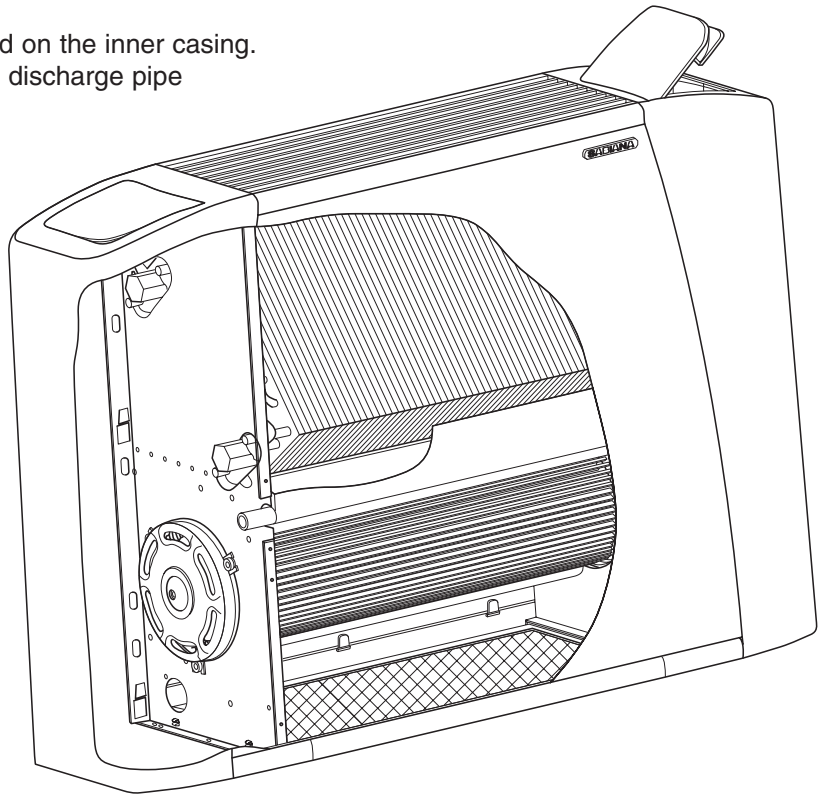

## MV Model

### Dimensions, Weight, Water contents

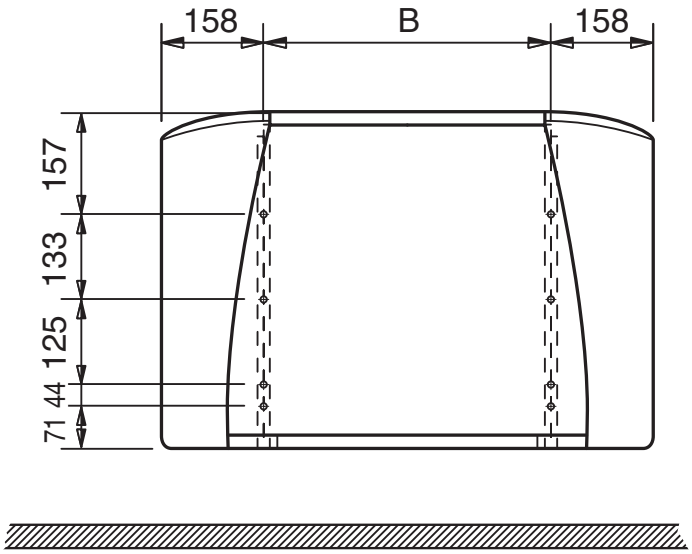


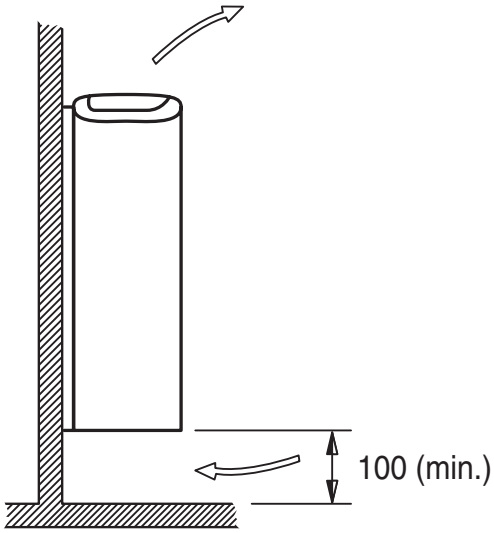


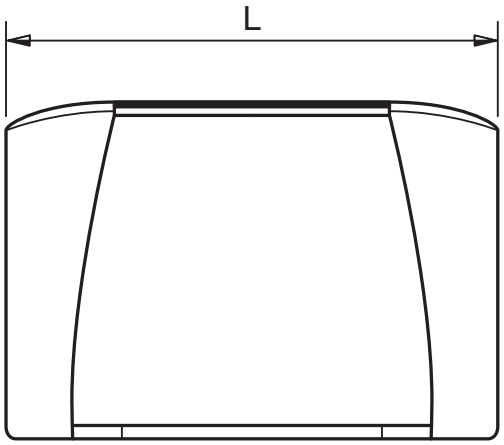


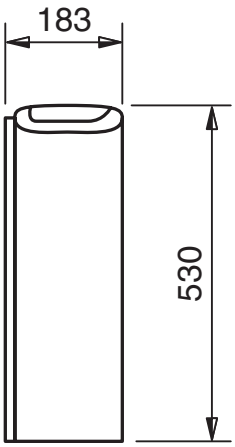


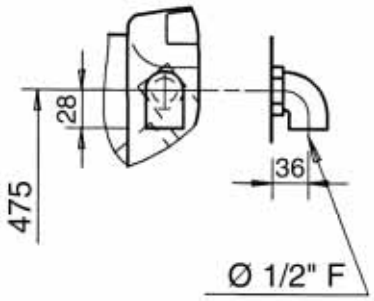


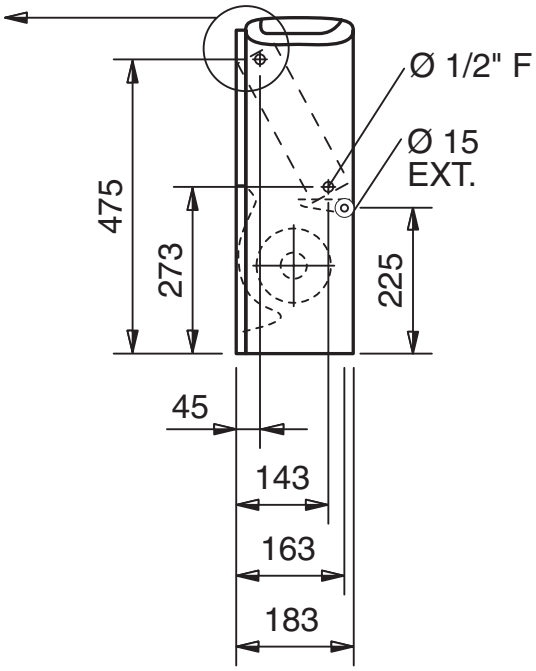


| MODEL | 1 | 2 | 3 | 4 |
|---|---|---|---|---|
| L (mm) | 670 | 770 | 985 | 1200 |
| B (mm) | 354 | 454 | 669 | 884 |
| WEIGHT (kg) | 12 | 13 | 18 | 20 |
| WATER CONTENTS (l) | 0,4 | 0,5 | 0,8 | 1,1 |

**N.B.:** to connect MV exposed model units to wall remote controls use the MV terminal adaptor kit Code 9060103.

## FSR Version

The following standard rating conditions are used:

**COOLING**

Entering air temperature + 27°C d.b., + 19°C w.b.
Water temperature + 7/12°C

**HEATING**

Entering air temperature + 20°C
Entering water temperature + 50°C
water flow rate as for the cooling conditions

| MODEL | | FSR 1 | | | FSR 2 | | | FSR 3 | | | FSR 4 | | |
|---|---|---|---|---|---|---|---|---|---|---|---|---|---|
| Speed | | 1 | 2 | 3 | 1 | 2 | 3 | 1 | 2 | 3 | 1 | 2 | 3 |
| Air flow | m³/h | 110 | 150 | 180 | 160 | 200 | 250 | 230 | 290 | 360 | 320 | 400 | 500 |
| Cooling total emission | kW | 0,63 | 0,78 | 0,87 | 0,95 | 1,10 | 1,30 | 1,31 | 1,59 | 1,87 | 2,00 | 2,40 | 2,80 |
| Cooling sensible emission | kW | 0,50 | 0,60 | 0,70 | 0,71 | 0,86 | 1,01 | 1,08 | 1,31 | 1,53 | 1,40 | 1,71 | 2,05 |
| Heating | kW | 0,80 | 1,00 | 1,20 | 1,13 | 1,32 | 1,60 | 1,80 | 2,20 | 2,60 | 2,50 | 3,00 | 3,60 |
| ΔP Cooling | kPa | 6,0 | 9,0 | 11,0 | 11,5 | 15,5 | 20,0 | 4,4 | 6,3 | 7,8 | 11,0 | 14,5 | 20,0 |
| ΔP Heating | kPa | 4,0 | 5,5 | 7,0 | 9,5 | 12,5 | 16,5 | 4,0 | 5,0 | 7,0 | 10,5 | 14,1 | 18,8 |
| Fan | W | 20 | 22 | 28 | 20 | 22 | 27 | 22 | 26 | 31 | 25 | 30 | 36 |
| Sound power Lw dBA | dB(A) | 31 | 35 | 42 | 33 | 38 | 43 | 34 | 39 | 45 | 34 | 40 | 46 |
| Sound pressure Lp dBA | dB(A) | 22 | 26 | 33 | 24 | 29 | 34 | 25 | 30 | 36 | 25 | 31 | 37 |

The sound pressure levels apply to the reverberant field of a 100 m³ room and a reverberation time of 0.5 sec.

## Operation limits

Highest water inlet temperature..... + 85°C
Lowest water inlet temperature..... + 5°C
Highest working pressure..... 8 bar

Water flow limits (l/h)

| MODEL | FSR 1 | FSR 2 | FSR 3 | FSR 4 |
|---|---|---|---|---|
| Lowest | 70 | 100 | 100 | 150 |
| Highest | 350 | 550 | 700 | 700 |

## Motor electrical data

| MODEL | | FSR 1 | FSR 2 | FSR 3 | FSR 4 |
|---|---|---|---|---|---|
| 230/1 50Hz | W | 25 | 30 | 35 | 40 |
| | A | 0,11 | 0,13 | 0,16 | 0,20 |
| | µF | 0,8 | 0,8 | 1,25 | 1,5 |

## Cooling emission
## E.A.T. °C: dry bulb + 27, wet bulb + 19

| MODEL | Speed | Air flow m³/h m³/sec. | EWT 5 -LWT 10°C Water flow l/h | Emission Tot. Watt | Emission Sen. Watt | EWT 7 -LWT 12°C Water flow l/h | Emission Tot. Watt | Emission Sen. Watt | EWT 12 -LWT 17°C Water flow l/h | Emission Tot. Watt | Emission Sen. Watt |
|---|---|---|---|---|---|---|---|---|---|---|---|
| 1 | High | 180 0,053 | 180 | 1060 | 800 | 150 | 880 | 700 | 85 | 500 | 500 |
| | Medium | 150 0,042 | 160 | 930 | 700 | 135 | 780 | 600 | 75 | 430 | 430 |
| | Low | 110 0,030 | 130 | 750 | 530 | 110 | 630 | 500 | 60 | 340 | 340 |
| 2 | High | 250 0,069 | 275 | 1600 | 1170 | 225 | 1300 | 1010 | 125 | 730 | 730 |
| | Medium | 200 0,055 | 240 | 1400 | 950 | 190 | 1100 | 860 | 110 | 620 | 620 |
| | Low | 160 0,044 | 190 | 1100 | 800 | 165 | 950 | 710 | 90 | 520 | 520 |
| 3 | High | 360 0,100 | 425 | 2450 | 1800 | 345 | 1900 | 1530 | 195 | 1120 | 1120 |
| | Medium | 290 0,081 | 360 | 2100 | 1400 | 295 | 1600 | 1310 | 165 | 950 | 950 |
| | Low | 230 0,064 | 300 | 1750 | 1200 | 240 | 1300 | 1080 | 135 | 780 | 780 |
| 4 | High | 500 0,139 | 595 | 3450 | 2550 | 485 | 2800 | 2190 | 275 | 1600 | 1600 |
| | Medium | 400 0,111 | 510 | 2950 | 2000 | 415 | 2400 | 1830 | 225 | 1300 | 1300 |
| | Low | 320 0,089 | 355 | 2050 | 1700 | 345 | 2000 | 1500 | 190 | 1100 | 1100 |

## Water pressure drop

| °C | K |
|---|---|
| 20 | 0,94 |
| 30 | 0,90 |
| 40 | 0,86 |
| 50 | 0,82 |
| 60 | 0,78 |
| 70 | 0,74 |
| 80 | 0,70 |

The water pressure drop figures refer to a mean water temperature of 10°C; for different temperature, multiply the pressure drop figures by the correction factors K.

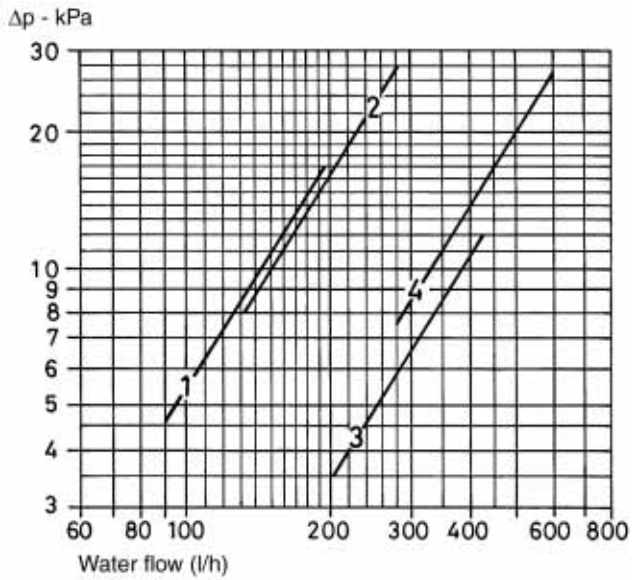


Correction factors for different entering air temperatures

| E.A.T. C° | K |
|---|---|
| 28/20 | 1,14 |
| 26/18,5 | 0,93 |
| 25/18 | 0,84 |

## Cooling emission graphs

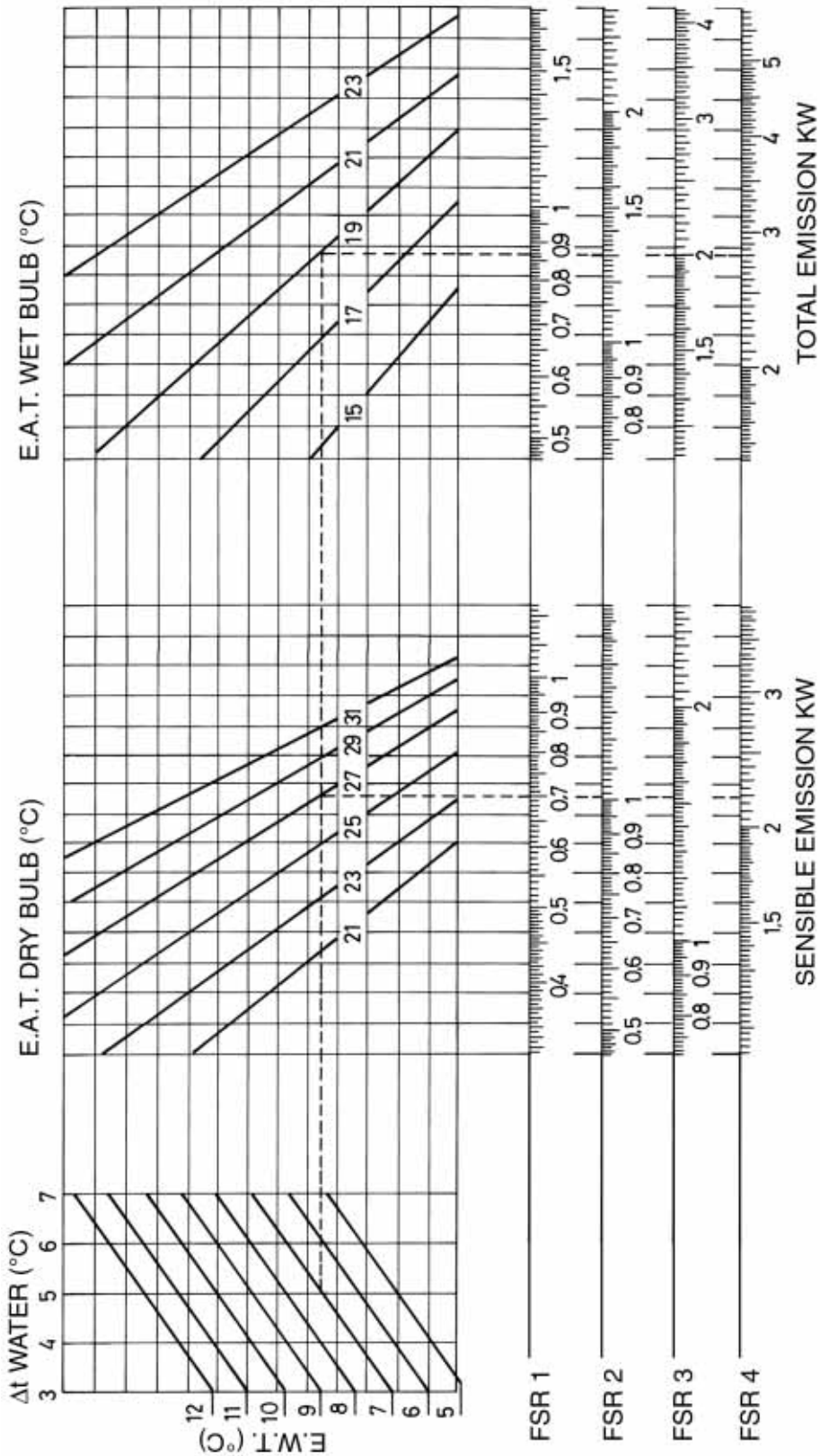


## Cooling output figures refer to high speed

Medium and low speed figures are obtained multiplying high speed figures by the following correction factors:

- **Medium speed** TOTAL K = 0,85 SENSIBLE K = 0,80
- **Low speed** TOTAL K = 0,72 SENSIBLE K = 0,66

**ATTENTION:**
A sensible heat figure higher than a total heat figure shows that the cooling is obtained without dehumidification, therefore the emission to refer to is the sensible one.

## Heating emission
## E.A.T. °C: 20

| MODEL | Speed | Air flow m³/h m³/sec. | E.W.T. 50 - L.W.T. 40°C Water flow l/h | E.W.T. 50 - L.W.T. 40°C Emission Watt | E.W.T. 70 - L.W.T. 60°C Water flow l/h | E.W.T. 70 - L.W.T. 60°C Emission Watt | E.W.T. 85 - L.W.T. 75°C Water flow l/h | E.W.T. 85 - L.W.T. 75°C Emission Watt |
|---|---|---|---|---|---|---|---|---|
| 1 | High | 180 0,053 | 90 | 1060 | 175 | 2040 | 235 | 2730 |
| | Medium | 150 0,042 | 80 | 920 | 155 | 1770 | 205 | 2360 |
| | Low | 110 0,030 | 60 | 720 | 120 | 1370 | 160 | 1830 |
| 2 | High | 250 0,069 | 130 | 1510 | 250 | 2900 | 335 | 3860 |
| | Medium | 200 0,055 | 110 | 1270 | 210 | 2450 | 275 | 3180 |
| | Low | 160 0,044 | 90 | 1070 | 175 | 2000 | 225 | 2600 |
| 3 | High | 360 0,100 | 205 | 2360 | 390 | 4510 | 520 | 6000 |
| | Medium | 290 0,081 | 170 | 1990 | 325 | 3770 | 435 | 5010 |
| | Low | 230 0,064 | 140 | 1640 | 265 | 3080 | 355 | 4090 |
| 4 | High | 500 0,139 | 280 | 3230 | 535 | 6210 | 715 | 8300 |
| | Medium | 400 0,111 | 230 | 2640 | 445 | 5160 | 595 | 6890 |
| | Low | 320 0,089 | 190 | 2190 | 370 | 4260 | 490 | 5690 |

| W.T. C° | E.A.T., C° 22 | 18 | 16 | 14 |
|---|---|---|---|---|
| **50/40** | 0,91 | 1,09 | 1,15 | 1,23 |
| **70/60** | 0,95 | 1,05 | 1,09 | 1,13 |
| **85/75** | 0,96 | 1,04 | 1,07 | 1,11 |

Correction factors for different entering air temperatures

## Heating emission graphs

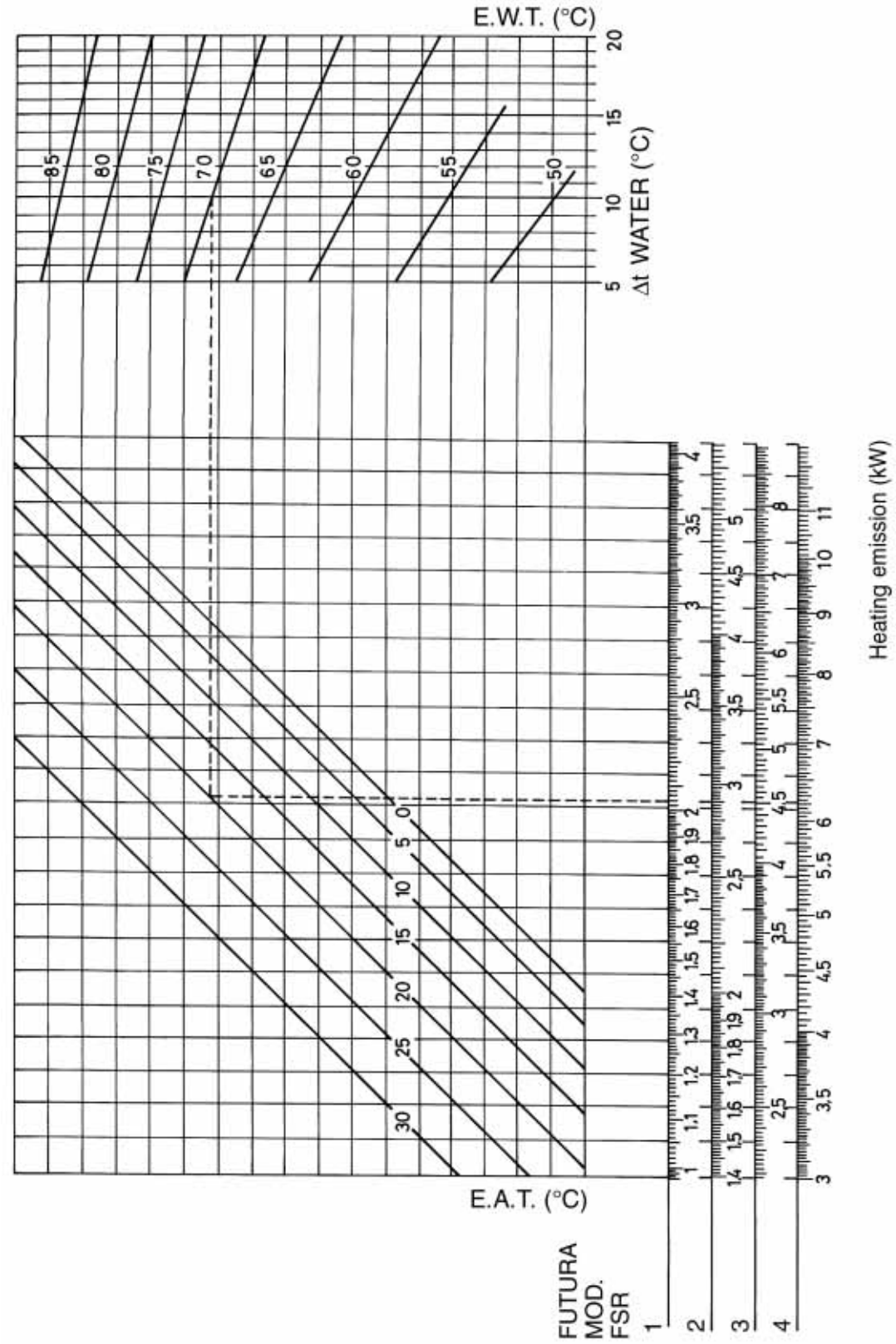


## Heating emission figures refer to high speed

Medium and low speed figures are obtained multiplying high speed figures by the following correction factors:

- **Medium speed** = 0,84
- **Low speed** = 0,70

| Identification | Code |
|---|---|
| MV - 3V | 9060130 |


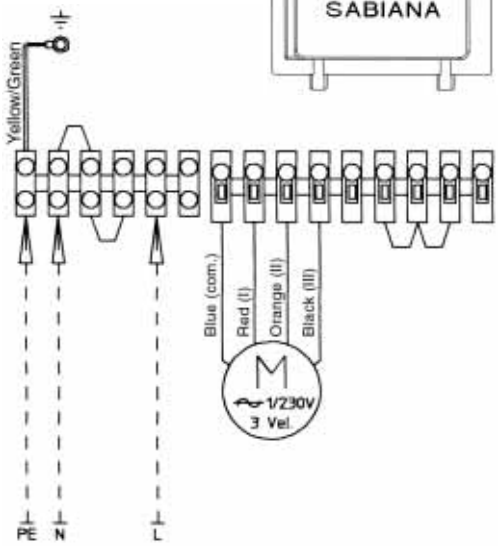


- ON-OFF switch and 3 speed switch.
- Without thermostatic control.

| Identification | Code |
|---|---|
| TMV - M | 9060131 |

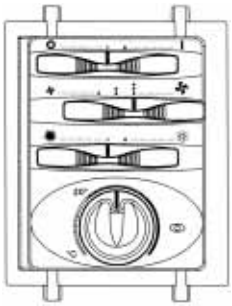

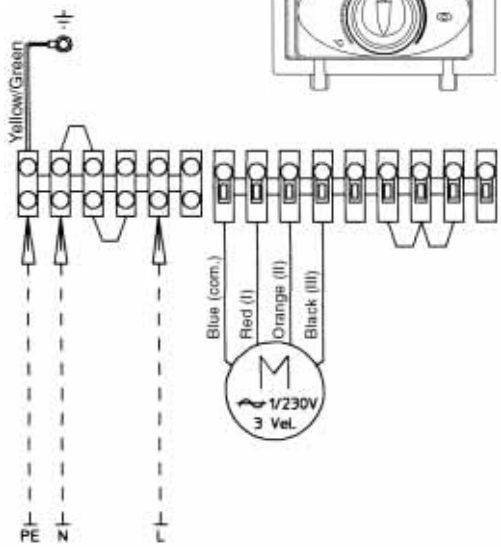


- ON-OFF switch and 3 speed switch.
- Summer/Winter switch.
- Electronic room thermostat for fan control (ON-OFF).

| Identification | Code |
|---|---|
| TMV - T | 9060132 |

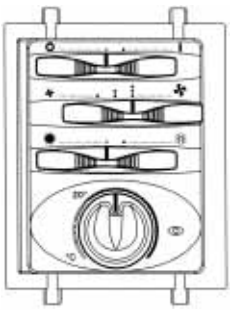

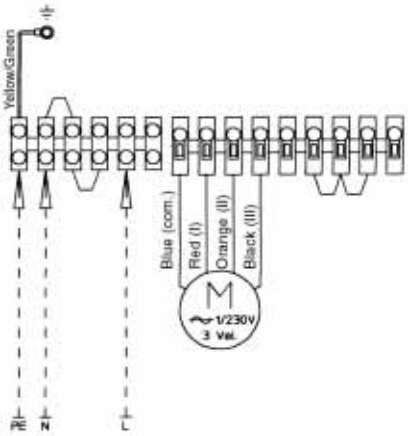


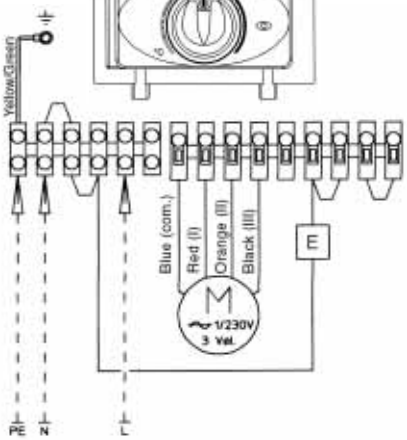


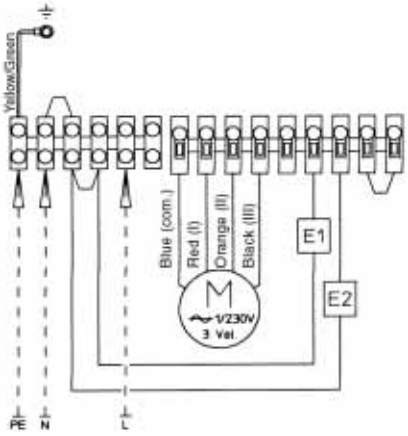


- ON-OFF switch.
- 3 speed switch.
- Summer/Winter switch.
- Electronic room thermostat for fan or valves control (ON-OFF).
- It allows to control the low temperature cut-out thermostat (TME).
- It allows to control the chilled water valve (ON-OFF) and the heating electric resistance (BEL) only in case that the coil is not feeded with hot water in winter (otherwise please use TMV-T-IAQ control with on/off switch for the electric resistance).

M = Fan
E = Water valve
E1 = Warm water valve
E2 = Chilled water valve

| Identification | Code |
|---|---|
| TMV - C | 9060133 |


M = Fan
E = Water valve
E1 = Warm water valve
E2 = Chilled water valve
CH = Remote Summer/Winter switch

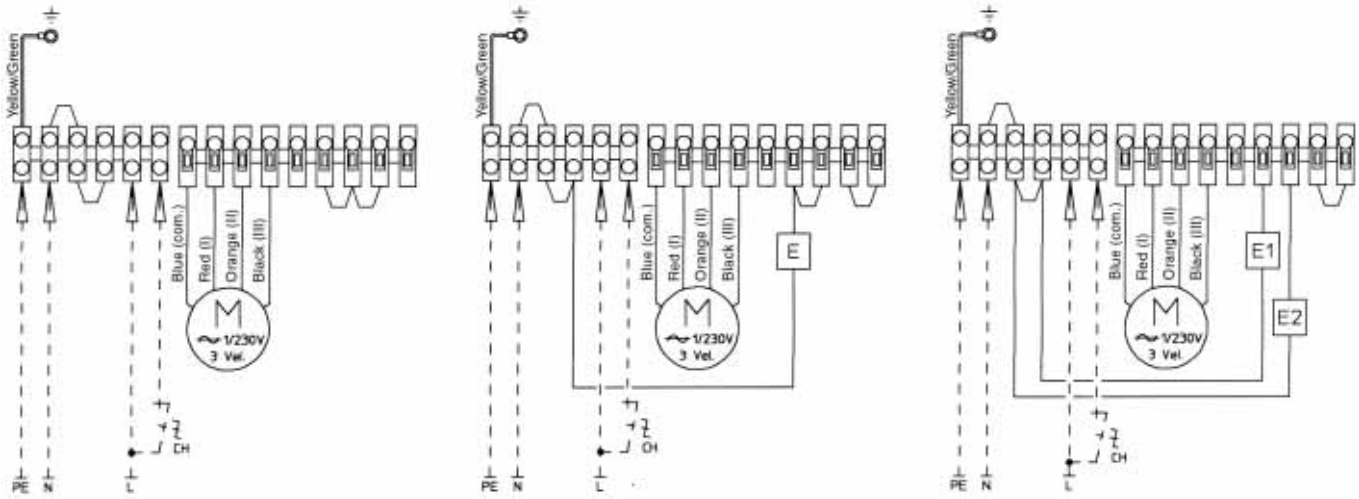


Same control as the TMV-T, but the Summer/Winter switch is centralized and remote, or an automatic change-over is fitted on the water pipe (for 2-tube installations only).

| Identification | Code |
|---|---|
| SEL-V (for version MV) | 9060136 |

- Speed switch (Slave): it allows to control up to 8 units with only one centralized thermostat (1 speed switch for each unit).
- For controls TMO-T and TMO-T-AU only.

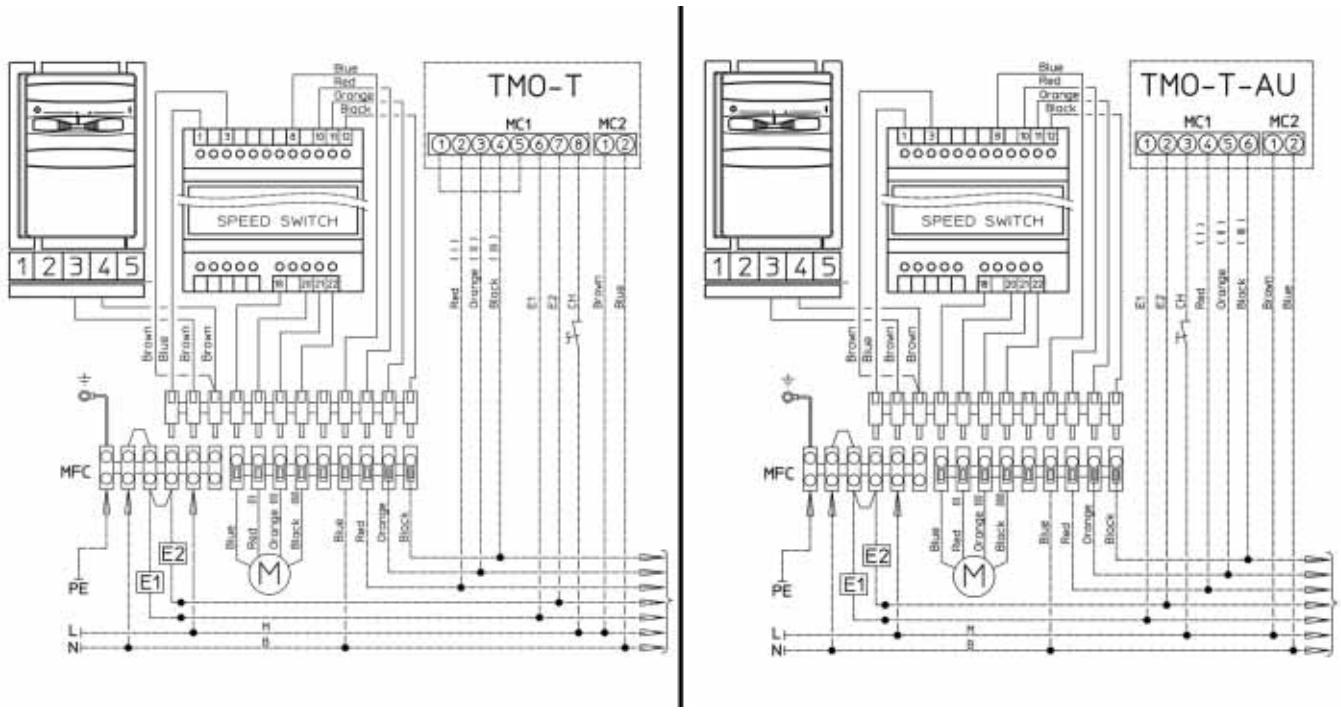

| Identification | Code |
|---|---|
| TMV - AU | 9060134 |

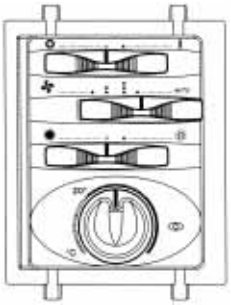

M = Fan
E = Water valve
E1 = Warm water valve
E2 = Chilled water valve
IN1 = SET point reduction
(-3°C Winter, +3°C Summer)

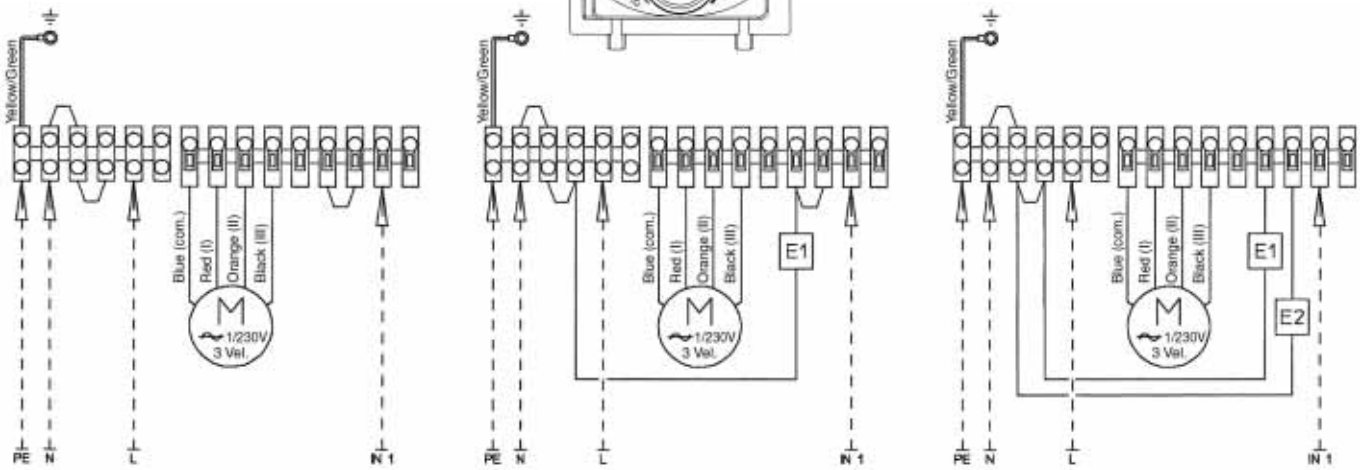


- Manual or automatic speed switch: on Auto Mode there is the automatic speed selection in accordance to the difference between room temperature and setpoint. When the setpoint is reached the fan go on OFF.
- Summer/Winter switch.
- Electronic room thermostat for valve(s) control (ON-OFF).
- It allows to control the low temperature cut-out (TME).
- It allows to control the chilled water valve (ON-OFF) and the heating electric resistance (BEL) only in case that the coil is not feeded with hot water in winter (otherwise please use TMV-AU-IAQ control with on/off switch for the electric resistance).

**N.B.:** with 4 pipe installations and continuous chilled and hot water supply, it allows the automatic summer/winter change-over in accordance to the room temperature (-1,6°C = Winter, +1,6°C = Summer, Neutral Zone 3,2°C).

| Identification | Code |
|---|---|
| TMV - AU - C | 9060135 |


M = Fan
E = Water valve
E1 = Warm water valve
E2 = Chilled water valve
IN1 = SET point reduction
-3°C Winter, +3°C Summer)
IN2/CH = Remote
Summer/Winter switch

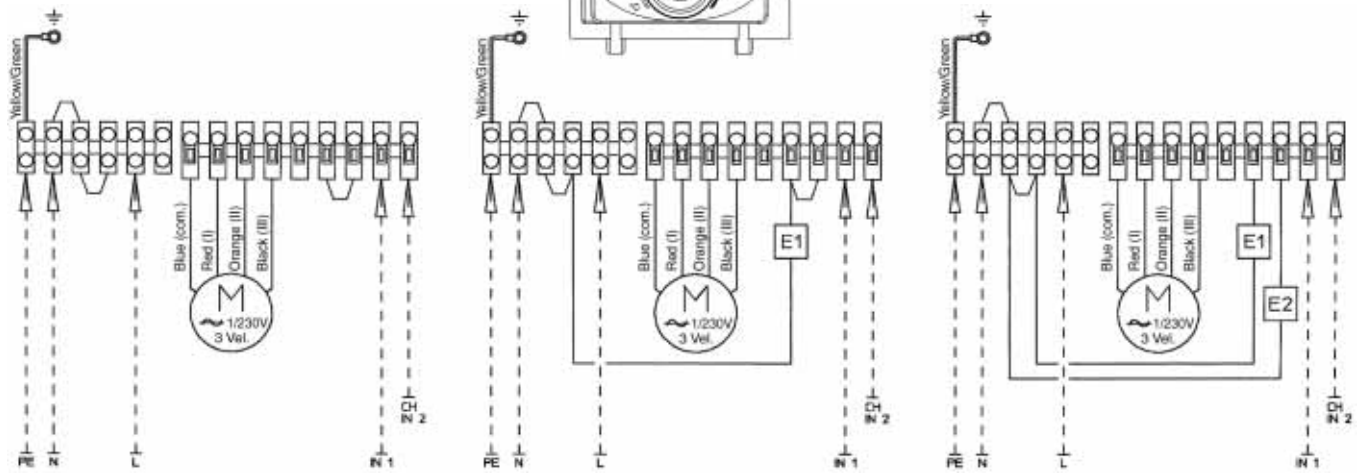


Same control as the TMV-AU, but the Summer/Winter switch is centralized and remote, or an automatic change-over is fitted on the water pipe (for 2-tube installations only).

| Identification | Code |
|---|---|
| MO - 3V | 9060160 |

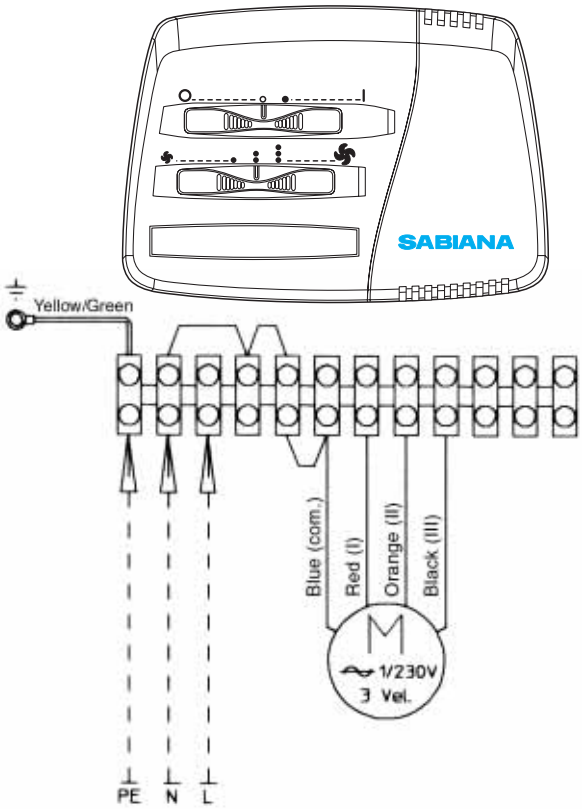


M = Fan
E = Water valve
E1 = Warm water valve
E2 = Chilled water valve

- ON-OFF switch and 3 speed switch.
- Without thermostatic control.

| Identification | Code |
|---|---|
| TMO - T | 9060161 |

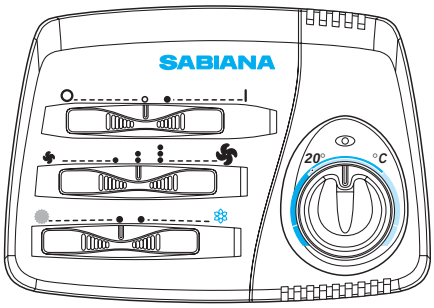


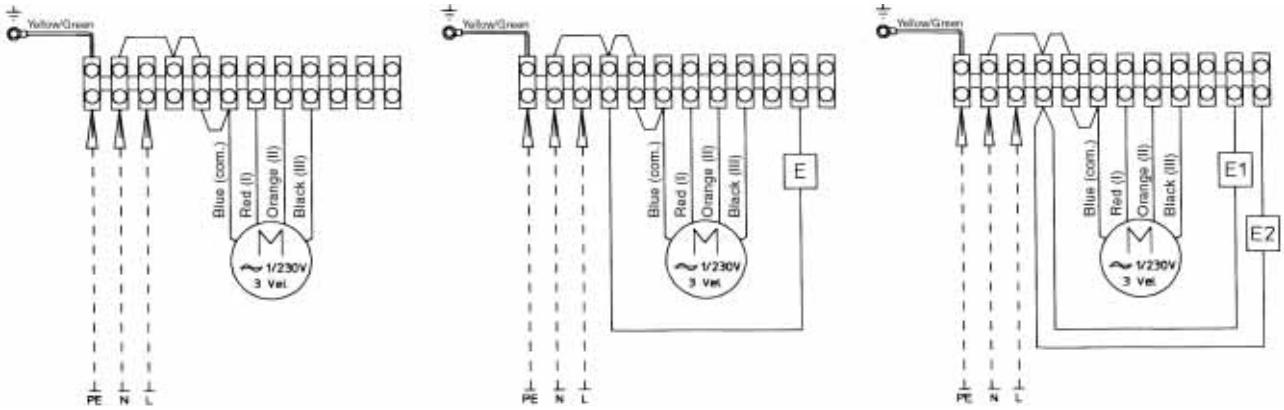


- ON-OFF switch.
- 3 speed switch.
- Summer/Winter switch.
- Electronic room thermostat for fan or valves control (ON-OFF).
- It allows to control the low temperature cut-out thermostat (TME).
- It allows to control the chilled water valve (ON-OFF) and the heating electric resistance (BEL) only in case that the coil is not feeded with hot water in winter (otherwise please use TMO-T-IAQ control with on/off switch for the electric resistance).
- It allows to control the summer or winter cycle with centralized and remote switch, or an automatic change-over fitted on the water pipe (for 2-tube installations only).


| Identification | Code |
|---|---|
| TMO - T - AU | 9060164 |

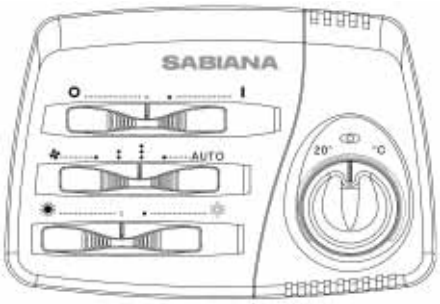


M = Fan
E = Water valve
E1 = Warm water valve
E2 = Chilled water valve
CH = Remote Summer/Winter switch

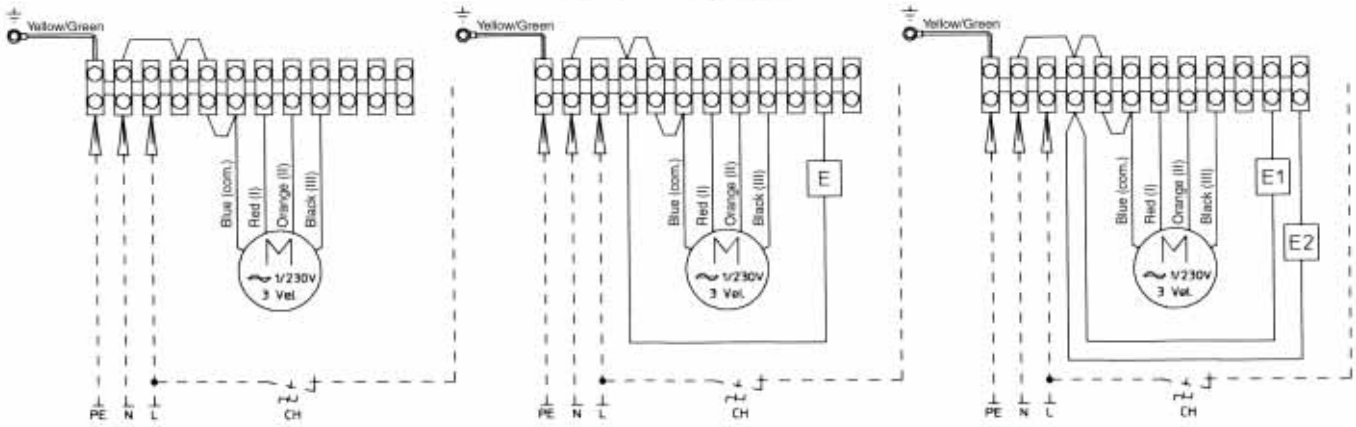


Same characteristic as TMO-T, adding:
- Manual or automatic speed switch.
- Manual or centralized Summer/Winter switch.
- Electronic thermostat for fan control (ON-OFF).
- Electronic thermostat for valve(s) control (ON-OFF).
- Simultaneus thermostatic control on the valves and fan.
- It allows to control the summer or winter cycle with centralized and remote switch, or an automatic change-over fitted on the water pipe (for 2-tube installations only).

**N.B.:** with 4 pipe installations and continuous chilled and hot water supply, it allows the automatic summer/winter change-over in accordance to the room temperature (-1°C = Winter, +1°C = Summer, Neutral Zone 2°C).

| Identification | Code |
|---|---|
| SEL - 0 (for versions IV - IO - MO) | 9060137 |

- Speed switch (Slave): it allows to control up to 8 units with only one centralized thermostat (1 speed switch for each unit).
- For controls TMO-T and TMO-T-AU only.

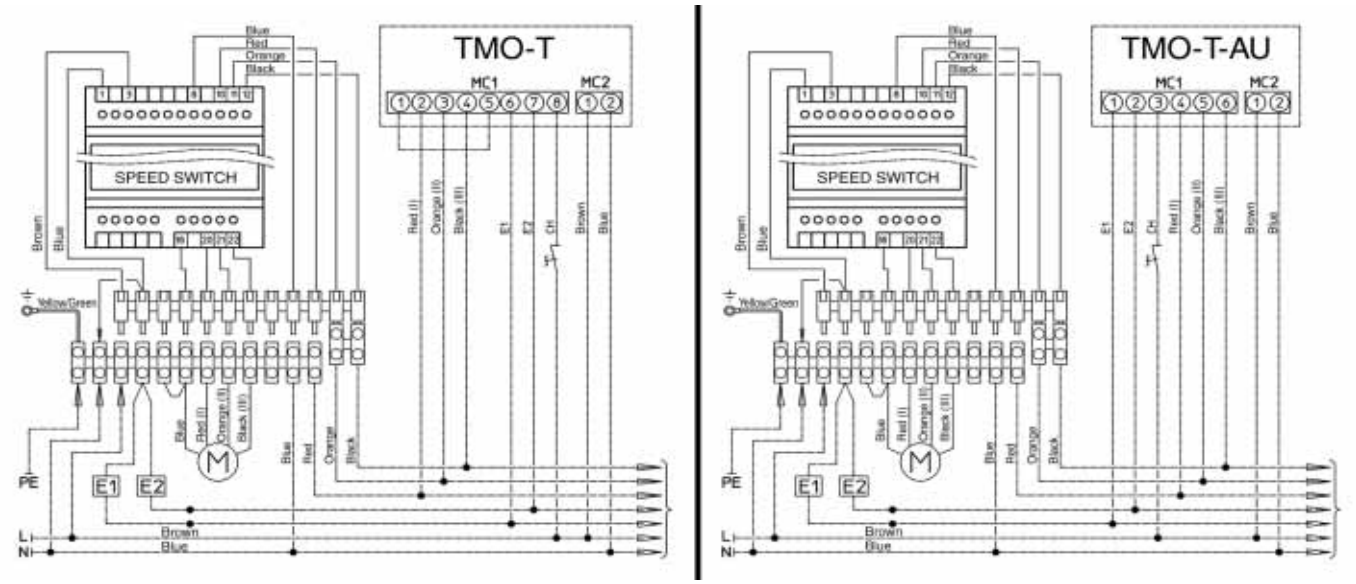

| Identification | Code |
|---|---|
| TMO - DI | 9060163 |

To be installed on the wall
or in the electric switch box.


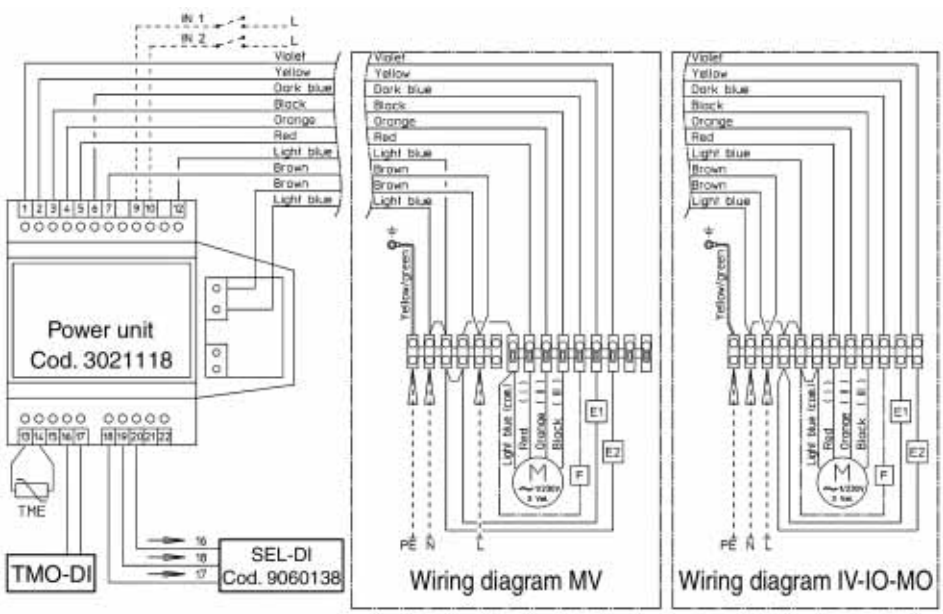


M = Fan
E = Water valve
E1 = Warm water valve
E2 = Chilled water valve
IN1 = Remote Summer/Winter switch
IN2 = SET Point reduction

- Manual or automatic speed switch.
- Manual or centralized Summer/Winter switch.
- Electronic thermostat for fan control (ON-OFF).
- Electronic thermostat for valve(s) control (ON-OFF).
- It allows to control the low temperature cut-out thermostat (TME).
- It allows to control the chilled water valve (ON-OFF) and the heating electric resistance (BEL) only in case that the coil is not feeded with hot water in winter.
- It allows to control the fan and the heating electric resistance.
- It allows to control up to 10 units with SEL-DI speed switch.

**N.B.:** with 4 pipe installations and continuous chilled and hot water supply, it allows the automatic summer/winter change-over in accordance to the room temperature (-1,6°C = Winter, +1,6°C = Summer, Neutral Zone 3,2°C).

| Identification | Code |
|---|---|
| SEL-DI | 9060138 |

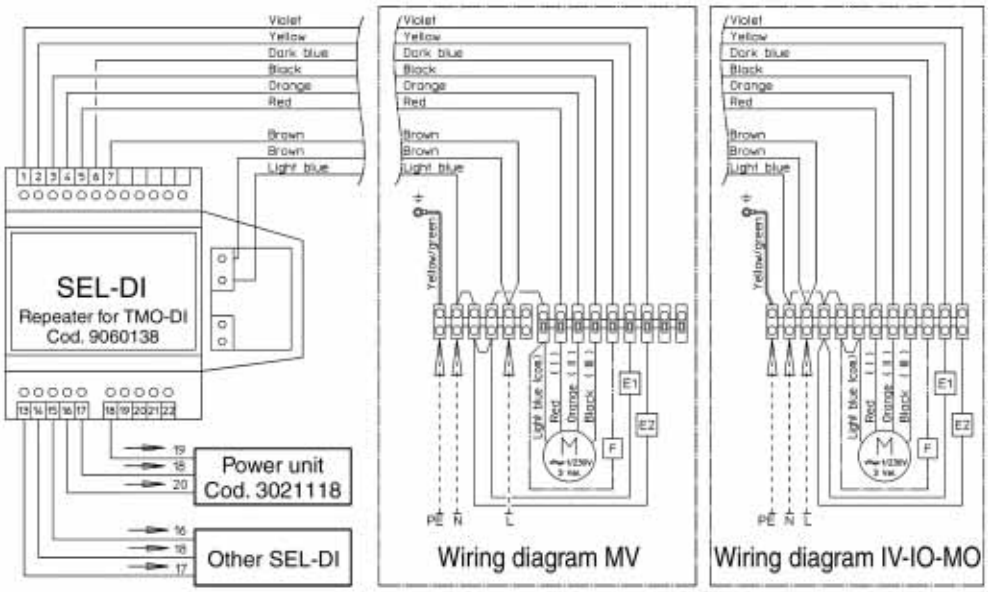


**Speed switch (slave)**
It allows to control up to 10 units with only one TMO-DI centralized thermostat.

## TMO 503

The TMO 503 control, S version for fan coils without valves and SV version for fan coils with valves, is designed to be installed in a series 503 wall box.
It is easy to use, it has a big and clear display, and a great precision.
The control is supplied integral with the external frame, but it is possible to use frames of the most known brand on the market (BTicino, Vimar, AVE, Gewiss).
The highest working electric absorbtion is 200 W.
If the fan coil has an higher absorbtion or more units are connected to the same control, the speed switch SEL-O must be installed.


| Type | Code |
|---|---|
| TMO 503-S | 9060171 |

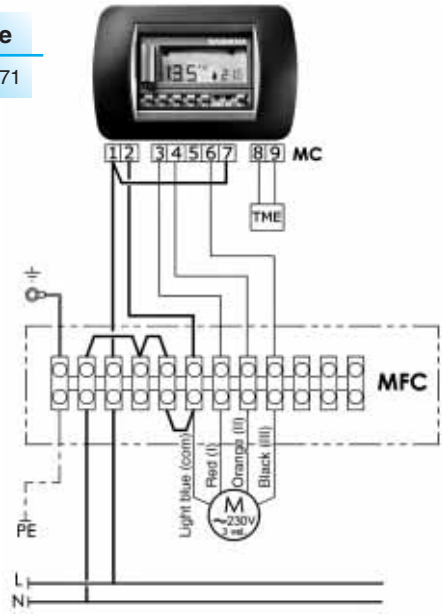


- Manual or automatic speed switch.
- Manual Summer/Winter switch.
- Electronic thermostat for fan control (ON-OFF).
- It allows to control the low temperature cut-out thermostat (TME).

| Type | Code |
|---|---|
| TMO 503-SV1 | 9060173 |

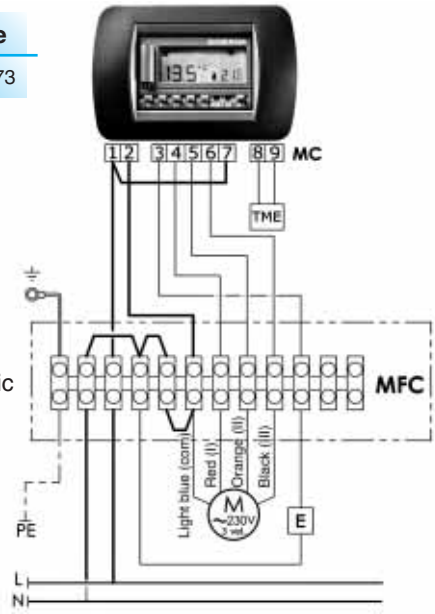


- Manual or automatic speed switch.
- Manual Summer/Winter switch.
- Electronic thermostat for valve control (ON-OFF).
- It allows to control the low temperature cut-out thermostat (TME).

This control can be used **only for 2 pipe systems** (with one valve only).

| Type | Code |
|---|---|
| TMO 503-SV2 | 9060172 |

**2 pipe units**

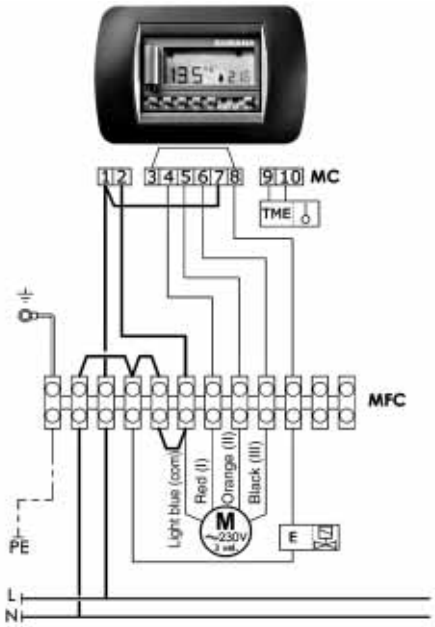


**4 pipe units**

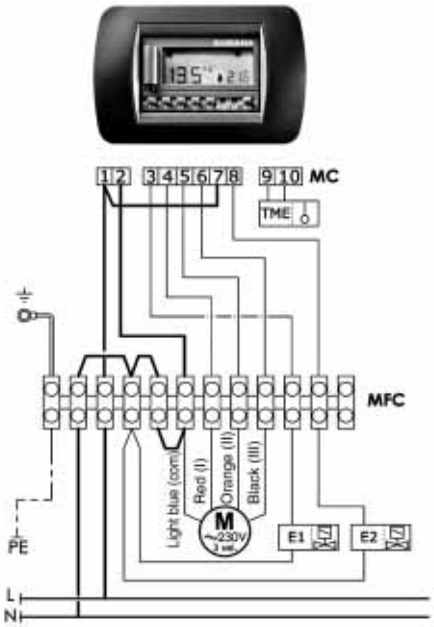


- Manual or automatic speed switch.
- Manual Summer/Winter switch.
- Electronic thermostat for valves control (ON-OFF).
- It allows to control the low temperature cut-out thermostat (TME).

This control can be used **also for 4 pipe systems** (with 2 valves).

***LEGEND***

**MFC** = Fan Coil electronic board
**MC** = Control electronic board
**M** = Fan
**E** = Water valve
**E1** = Warm water valve
**E2** = Chilled water valve

## TMO 503 with SEL-O

The TMO 503 control with the SEL-O speed switch can control up to 8 units with only one centralized thermostat (the SEL-O speed switch must be fitted on all the units).

### TMO 503-S with SEL-O diagram
(Code 9060171 + Code 9060137)

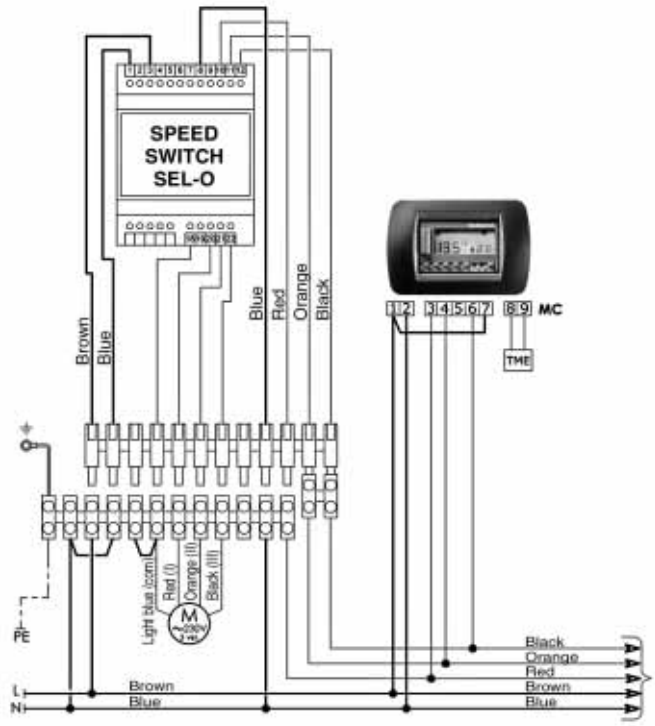


Diagram for fan coils **without** valve.

### TMO 503-SV1 with SEL-O diagram
(Code 9060173 + Code 9060137)

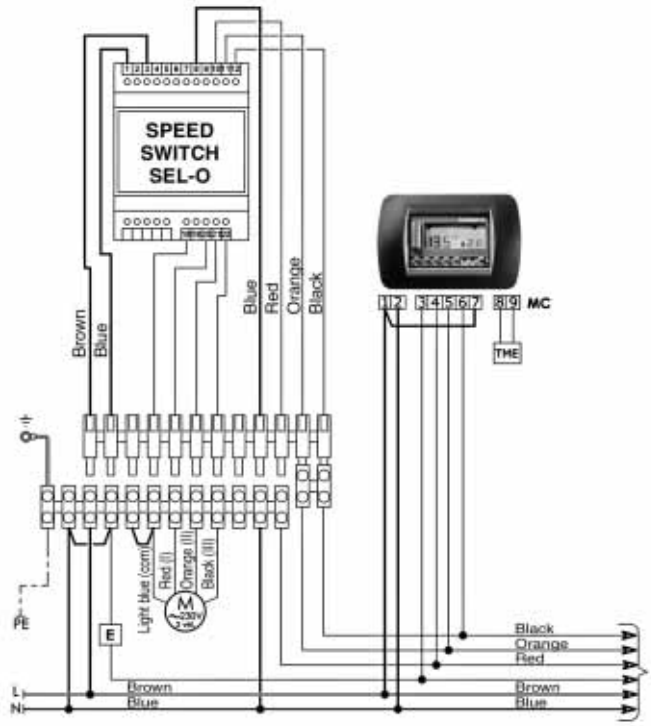


Diagram for fan coils **with** valve.

### TMO 503-SV2 with SEL-O diagram (Code 9060172 + Code 9060137)

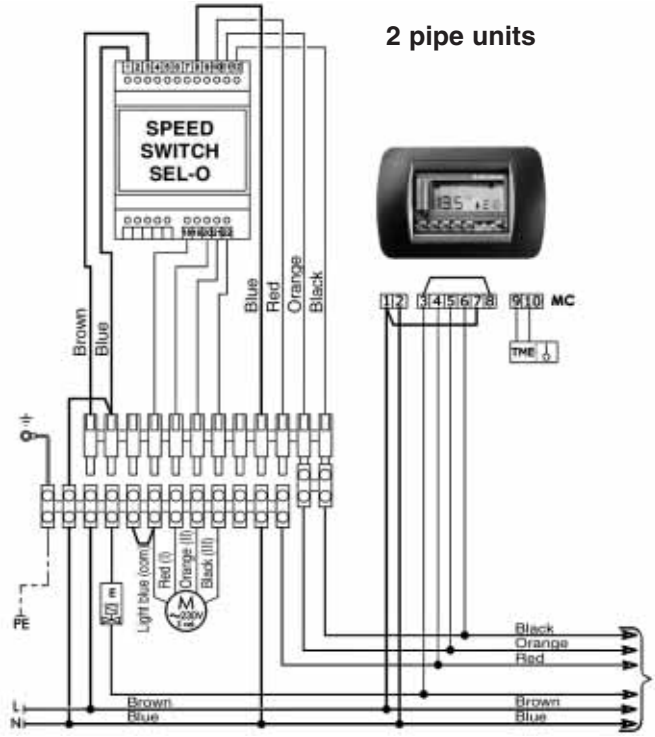


Diagram for fan coils **with** 1 valve.

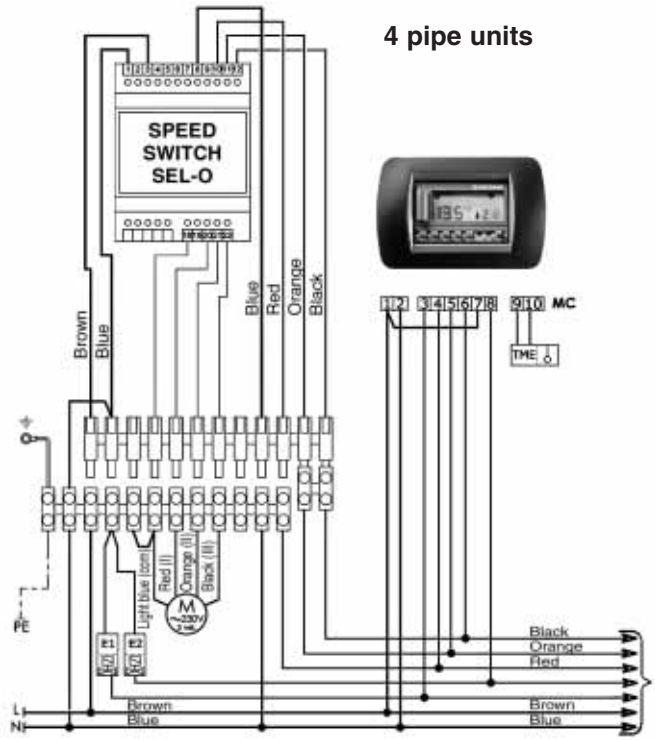


Diagram for fan coils **with** 2 valves.

***LEGEND***

**MFC** = Fan Coil electronic board
**MC** = Control electronic board
**M** = Fan
**E** = Water valve
**E1** = Warm water valve
**E2** = Chilled water valve

The Futura units can be supplied with a micro-processor managing system operated by an infra-red remote control with liquid crystall display.

Integral with the unit is the room temperature probe, the water temperature probe (cut-out thermostat), the infra-red remote control and the electronic board with RS485 communicating connection which can control up to 20 units connected between them.
The electronic board is of master/slave mode and the serial communicating connection allows the serial connection.

**Control operations:**

- Temperature set.
- Fan speed switch with possible automatic speed selection.
- 24 hours on/off program.
- on/off cooling valve control.
- on/off heating valve control.
- Control of the valves only or of the valves and the fan together.
- Valve control of 2 or 4 pipe systems with winter/summer switch on the infra-red control.
- Valve control of 4 pipe systems with automatic heating/cooling mode selection with 2°C dead zone.

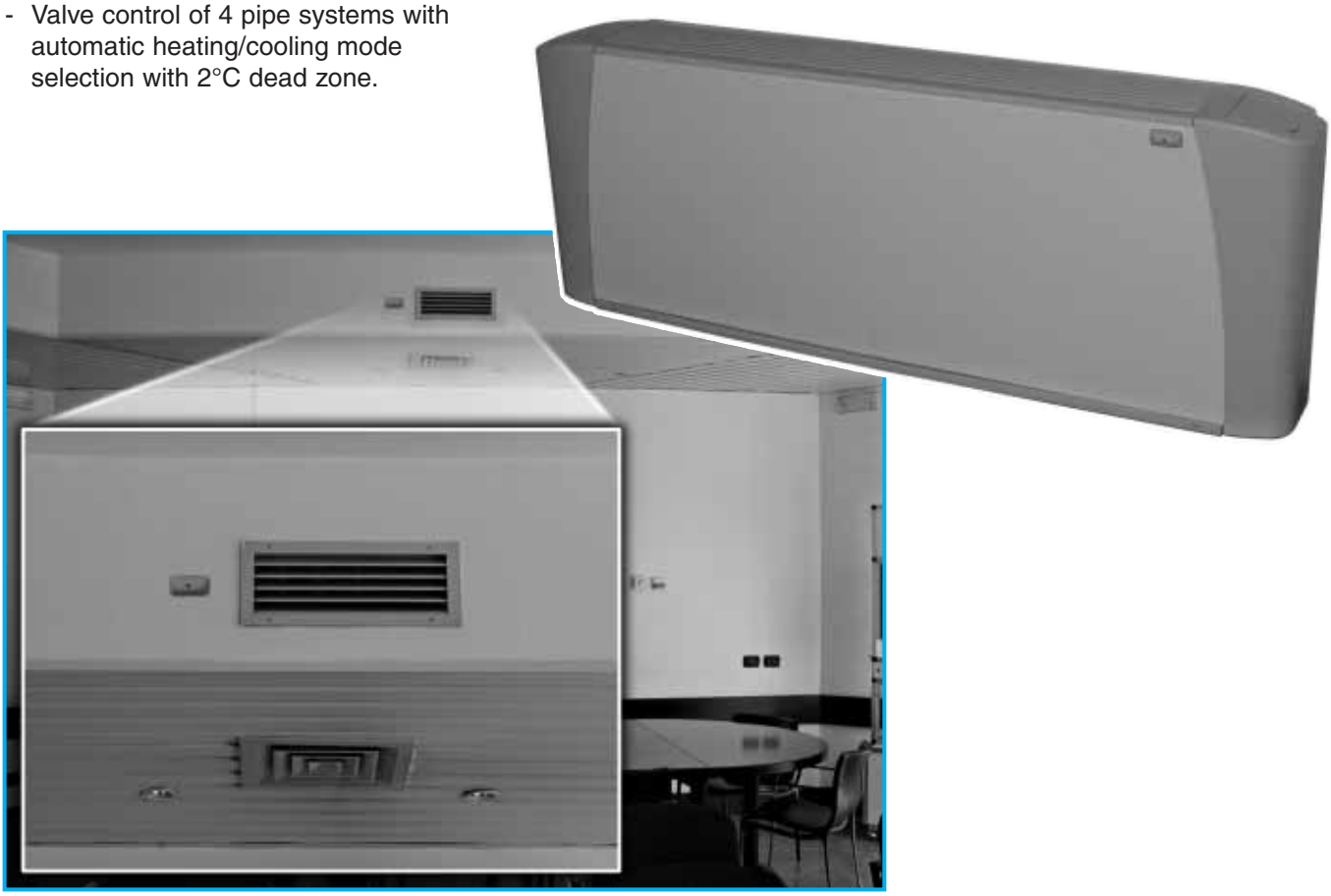

## Unit with infra-red remote control

The electronic board, fitted inside the electrical panel, can manage different control modes so as to best satisfy the requirements of the installation. These modes are selected by suitably positioning the configuration dipswitches, which define the following main functions:

- **2 pipe / 4 pipe** system
- Operation **without / with** remote control
- Continuous ventilation
- Close valve and stop fan in cooling mode (autofan function)
- Close valve and stop fan in heating mode (autofan function)
- Close valve and stop fan in both cooling and heating mode (autofan function)

The autofan function allows the simultaneous on/off control of the water valve and the fan, while at the same time optimising the operation of the unit. When reaching the set point, the controller closes the water valve (valve off) and only 3 minutes later stops the fan, so as to correctly compensate for the valve closing time. To prevent the air probe from measuring an incorrect temperature, when the fan is off the controller runs a number of fan ON cycles to annul the effect of any stratification of the air in the room.

The autofan function can be activated in cooling only mode, in heating only mode or in both operating modes.

In two pipe systems, a water probe can be installed on the supply pipe to the unit upstream of the water valve. Based on the temperature read in this section of the pipe, the device will select either cooling or heating operation.

The electronic board also features a contact for connection to a window switch or remote enabling signal. When the contact is closed, the unit can operate, when the contact is open, the unit stops. The same contact can be used for starting and stopping the unit from an external timer or any other remote switching device.

In addition, a series of units can be switched on or off at the same time, by using a flip-flop switch connected to the terminals present on the board.

Sensors that require a 12 volt power supply, for example occupancy sensors, can be connected to other terminals on the electronic board and then to the on/off contacts. The board is able to power external sensors with a maximum current of 60mA.

## Low temperature cut-out thermostat accessory

Suitable for infra-red remote control only.

NTC sensor to be connected to the control board for the following working modes:
- if connected to the T3 contact of the board it works like a cut-out thermostat: fitted between the coil fins it stops the fan when the water temperature is lower than 38°C and it starts the fan when the water temperature reaches 42°C.
- if connected to the T2 contact of the board it works like a change-over: fitted in contact to the supply pipe it controls automatically the winter/summer switch in accordance to the water temperature.

When one sensor is connected to the T2 contact and one to the T3 contact both working modes are performed.

| **Type** | T2 / T3 |
|---|---|
| **Code** | 9079103 |

## Connection of the units in series and centralized management

| Identification | Code |
|---|---|
| PCR - DI | 9079102 |


A group of FUTURA units can be connected via a serial link and can consequently be managed at the same time by just one infra-red remote control.
Using the special jumper present on the board, one unit must be configured as the master, and all the others as slaves. It is clear that the remote control must be pointed at the receiver on the master unit.
To avoid problems, it is recommended to install and connect the receiver only on the master unit.
Another option available by the serial communication between the units is possibility to connect up to 60 FUTURA units in series (the maximum length of the connection cable must not exceed 800 m) and manage them with just one wall-mounted intelligent controller. The wall-mounted controller can be used to set the operating mode for each individual unit connected, display the operating conditions of each individual unit, and set the on/off time sets for each day of the week. If more than 60 units need to be connected, two or more wall-mounted intelligent controllers must be used. Each wall-mounted controller only manages the units it is connected to.

The PCR-DI control is used to manage a series of fan coils, up to a maximum of 60 units, from one single control point. The PCR-DI control communicates via a serial line with all the units connected, with the possibility of controlling them all together or individually. In fact, the unique address of each individual fan coil means that all the units can be called at the same time, or the individual unit called, to perform the following functions:

- display the current operating mode, the fan speed, the set point
- display the room temperature measured on the individual unit
- turn all the units on and off at the same time or alternatively each unit individually
- change the operating mode (fan only, heating, cooling, automatic changeover)
- change the set point

Each function can then be sent to all the units connected, or alternatively to each individual unit.
Different set points or operating modes can be set for each individual unit.

The PCR-DI panel can also be used for the time management of the units over the week. Two on times and two off times can be set on the units for each day of the week.

The weekly programming mode can be stopped at any time, returning to the manual setting and then weekly programming mode can subsequently be started again.

## PC Maxinet Software

### Connection of a Futura network of more than 60 units

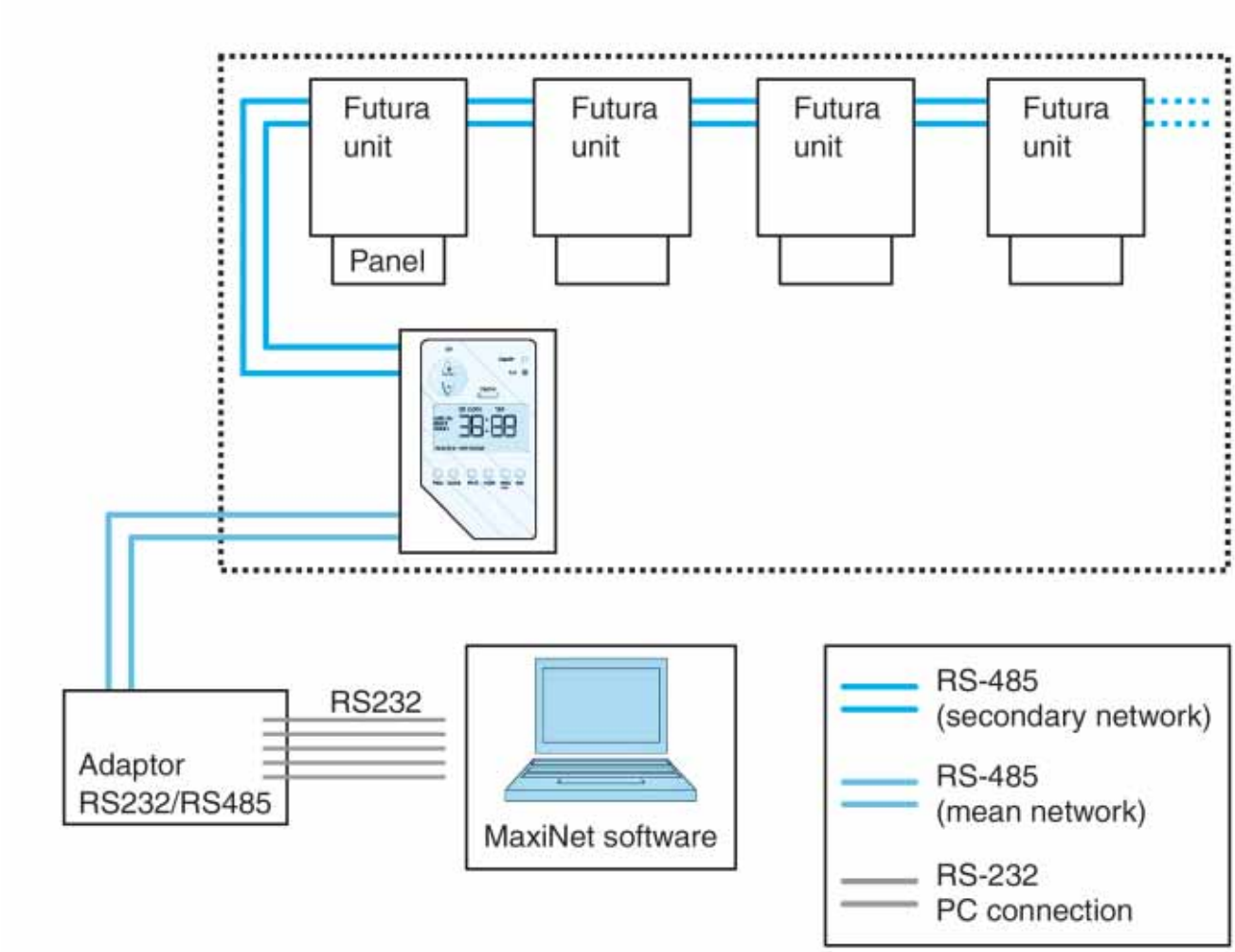

| FUTURA MV-MVB CONTROL OPERATIONS / FUTURA MV-MVB CONTROL IDENTIFICATION | MV-3V | TMV-M | TMV-T | TMV-C | TMV-AU | TMV-AU-C | MV-3V-IAQ | TMV-M-IAQ | TMV-T-IAQ | TMV-C-IAQ | TMV-AU-IAQ | TMV-AU-C-IAQ |
|---|---|---|---|---|---|---|---|---|---|---|---|---|
| ON-OFF switch | ● | ● | ● | ● | ● | ● | ● | ● | ● | ● | ● | ● |
| ON-OFF switch for Crystall electrostatic filter or electric resistance | | | | | | | ● | ● | ● | ● | ● | ● |
| Manual 3 speed switch | ● | ● | ● | ● | ● | ● | ● | ● | ● | ● | ● | ● |
| Manual/Automatic 3 speed selection | | | | | ● | ● | | | | | ● | ● |
| Summer/Winter switch | | ● | ● | | ● | | | ● | ● | | ● | |
| Remote centralized summer/winter switch or by an automatic change-over fitted on the water pipe | | | | ● | | ● | | | | ● | | ● |
| Automatic Summer/Winter switch with neutral zone for 4 pipe installation with 2 valves | | | | | ● | ● | | | | | ● | ● |
| Room thermostat for fan control (ON-OFF) | | ● | ● | ● | ● | ● | | ● | ● | ● | ● | ● |
| Room thermostat for 1 valve control (2 pipe installation) | | | ● | ● | ● | ● | | | ● | ● | ● | ● |
| Room thermostat for 2 valve control (4 pipe installation) | | | ● | ● | ● | ● | | | ● | ● | ● | ● |
| Room thermostat for chilled water valve (SUMMER) and electric resistance (WINTER) control (in winter only the resistance is working) | | | ● | ● | ● | ● | | | ● | ● | ● | ● |
| Room thermostat for fan and electric resistance control (not for CRYSTALL) | | | | | | | | | | | ● | ● |
| Installation of electronic low temperature cut-out thermostat (TME) | | | ● | ● | ● | ● | | | ● | ● | ● | ● |
| Installation of bimetallic low temperature cut-out thermostat (TMM) | ● | | | | | | ● | | | | | |
| FUTURA MV-MVB CONTROL CODE | 9060130 | 9060131 | 9060132 | 9060133 | 9060134 | 9060135 | 9063000 | 9063001 | 9063002 | 9063003 | 9063004 | 9063005 |

| FUTURA MO-IO-IV CONTROL OPERATIONS / FUTURA MO-IO-IV CONTROL IDENTIFICATION | MO-3V | TMO-T | TMO-T-AU | TMO-DI | TMO-503-S | TMO-503-SV1 | TMO-503-SV2 | MO-3V-IAQ | TMO-T-IAQ | TMO-T-AU-IAQ |
|---|---|---|---|---|---|---|---|---|---|---|
| ON-OFF switch | ● | ● | ● | ● | ● | ● | ● | ● | ● | ● |
| ON-OFF switch for Crystall electrostatic filter or electric resistance | | | | ● | | | | ● | ● | ● |
| Manual 3 speed switch | ● | ● | ● | ● | ● | ● | ● | ● | ● | ● |
| Manual/Automatic 3 speed selection | | | | ● | ● | ● | ● | | | |
| Summer/Winter switch | | ● | ● | ● | ● | ● | ● | | ● | ● |
| Remote centralized summer/winter switch or by an automatic change-over fitted on the water pipe | | | ● | ● | | | | | | ● |
| Automatic Summer/Winter switch with neutral zone for 4 pipe installation with 2 valves | | | | ● | | | | | | |
| Room thermostat for fan control (ON-OFF) | | ● | ● | ● | ● | | | | ● | ● |
| Room thermostat for 1 valve control (2 pipe installation) | | ● | ● | ● | | ● | ● | | ● | ● |
| Room thermostat for 2 valve control (4 pipe installation) | | ● | ● | ● | | | ● | | ● | ● |
| Simultaneous thermostatic control on the valves and fan | | | ● | | | | | | | ● |
| Room thermostat for chilled water valve (SUMMER) and electric resistance (WINTER) control (in winter only the resistance is working) | | ● | ● | ● | | | | | ● | ● |
| Room thermostat for fan and electric resistance control (not for CRYSTALL) | | | | ● | | | | | | |
| Installation of electronic low temperature CUT-OUT thermostat (TME) | | ● | ● | ● | ● | ● | ● | | ● | ● |
| Installation of bimetallic low temperature CUT-OUT thermostat (TMM) | ● | | | | | | | ● | | |
| FUTURA MO - IO - IV CONTROL CODE | 9060160 | 9060161 | 9060164 | 9060163 | 9060171 | 9060173 | 9060172 | 9063020 | 9063021 | 9063023 |

## TME low temperature cut-out thermostat

To be fitted between the coil fins.
To be used with the following controls: TMV-T, TMV-C, TMV-AU, TMV-AU-C, TMO-T, TMO-T-AU, TMO-DI, TMO-503 and corresponding IAQ controls.

| VERSION | FSC - FST - FSR - CRYSTALL FS |
|---|---|
| *MODEL* | *MV - MVB - MO - IV - IO* |
| CODE | 3021091 |

It stops the fan when the water temperature is lower than 38°C and it starts the fan when is higher than 42°C.

## TMM low temperature cut-out thermostat

To be installed in contact with the hot water circuit.
To eliminate cold air blow.
Installed by the installing engineer.
To be used with the following controls:
MV-3V, MO-3V, MV-3V-IAQ, MO-3V-IAQ.
For units working on heating only.

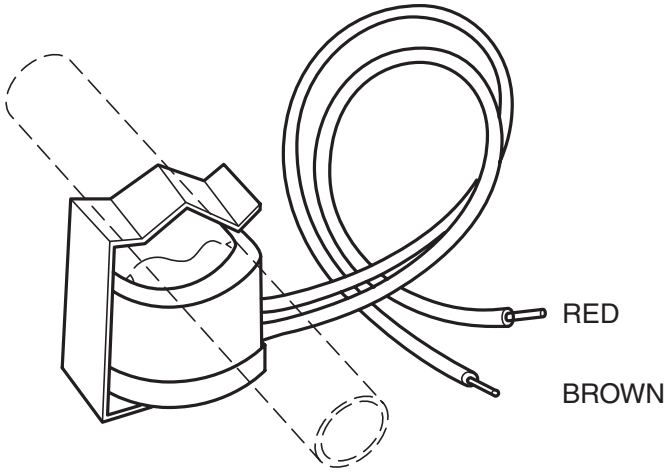


| VERSION | FSC - FST - FSR - CRYSTALL FS |
|---|---|
| *MODEL* | *MV - MVB - MO - IV - IO* |
| CODE | 9053048 |

It stops the fan when the water temperature is lower than 32°C and it starts the fan when is higher than 42°C.

## Change Over CH 15-25

Automatic summer/winter switch to be installed in contact with the water circuit (for 2-tube installations only).
To be used with the following controls:
TMV-C, TMV-AU-C, TMO-T, TMO-T-AU, TMO-DI.

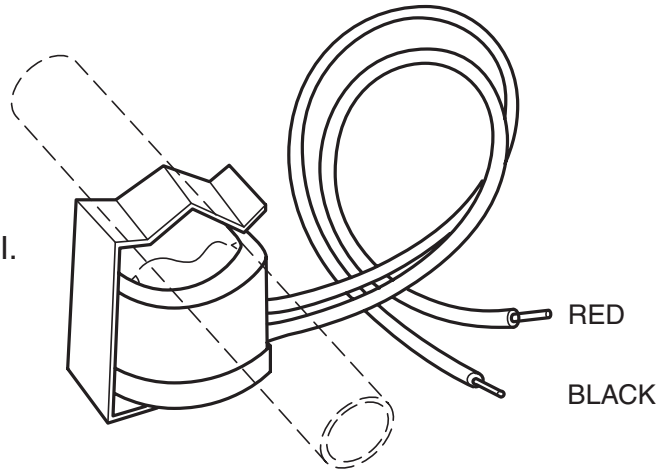


| VERSION | FSC - FST - FSR - CRYSTALL FS |
|---|---|
| *MODEL* | *MV - MVB - MO - IV - IO* |
| CODE | 9053049 |

| Identification | Code |
|---|---|
| KIT | 9060103 |

| VERSION | FSC - FST - FSR |
|---|---|
| *MODEL* | *MV - MVB* |
| CODE | 9060103 |

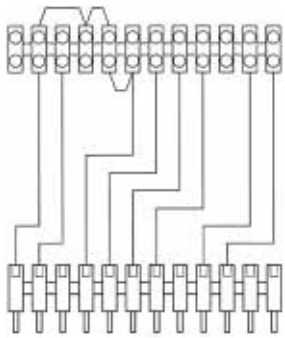

## Terminal board adaptor kit

To connect the units MV and MVB with the MO-3V, TMO-T, TMO-T-AU or TMO-503 controls, a terminal board adaptor kit is available on request.

## BEL electric resistance

1 PHASE 230V

Resistance with integral: safety thermostat and relay control.

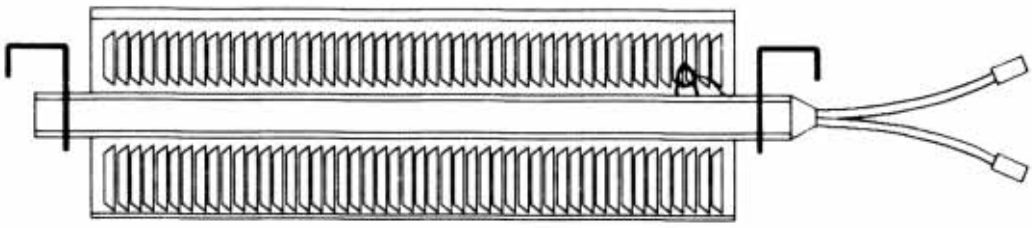

| VERSION | FSC - FST |
|---|---|
| *MODEL* | *MV - MVB - MO - IV - IO* |

| SIZE | 1 | 2 | 3 | 4 | 5 | 6 | 7 |
|---|---|---|---|---|---|---|---|
| Watt | 1000 | 1500 | 2000 | 2000 | 2500 | 2500 | 2750 |
| CODE | 9060240 | 9060241 | 9060242 | 9060242 | 9060243 | 9060243 | 9060244 |

## Extension condensate collection tray to cover valve assembly

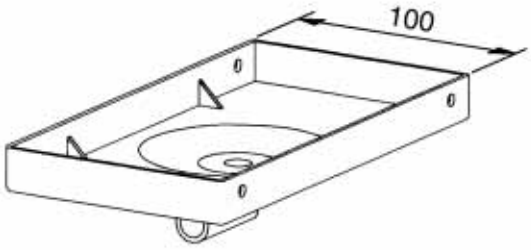


BSV

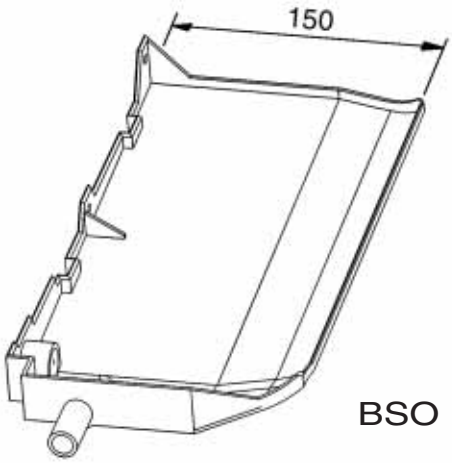


BSO

| VERSION | FSC - FST - CRYSTALL FS | FSR |
|---|---|---|
| *MODEL* | *MV - MVB - IV* | *MV* |
| CODE | 6060400 | 6062125 |

| VERSION | FSC - FST | |
|---|---|---|
| *MODEL* | *MO - IO* | |
| CONNECTION SIDE | LEFT | RIGHT |
| *TYPE* | *BSO-SX* | *BSO-DX* |
| CODE | 6060402 | 6060403 |

## SCR plastic condensate drain pipe with fast connection (allows correct condensate drain)

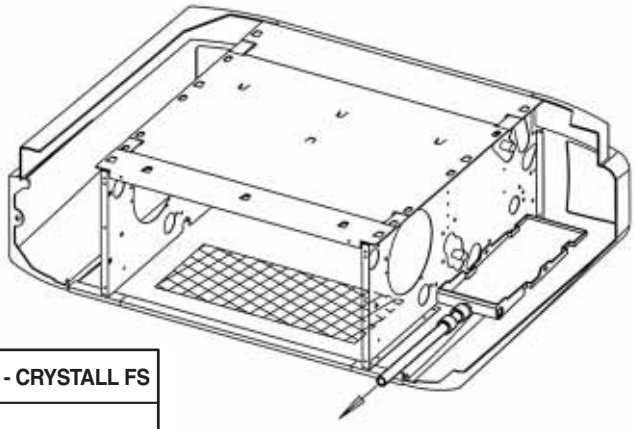

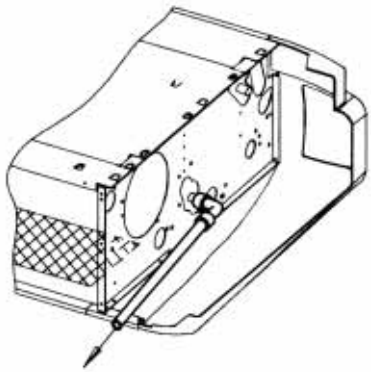

| VERSION | FSC - FST - CRYSTALL FS |
|---|---|
| *MODEL* | *MO - IO* |
| CODE | 6060420 |

## PAP - PAC feet

| VERSION | | | | PAP | PAC | CODE |
|---|---|---|---|---|---|---|
| | | A | L | B | B | |
| FSC - FST | 1 | 185 | 430 | 100 | 200 | 9060150 |
| FSC - FST | 2 | 185 | 645 | | | |
| FSC - FST | 3-4 | 185 | 860 | | | |
| FSC - FST | 5 | 185 | 1119 | | | |
| FSC | 6-7 | 215 | 1119 | 100 | 200 | 9060151 |
| FSR | 1 | 143 | 330 | 100 | 200 | 9062200 |
| FSR | 2 | 143 | 430 | | | |
| FSR | 3 | 143 | 645 | | | |
| FSR | 4 | 143 | 860 | | | |

**PAP:** without CRYSTALL FS filter

**PAC:** with CRYSTALL FS filter

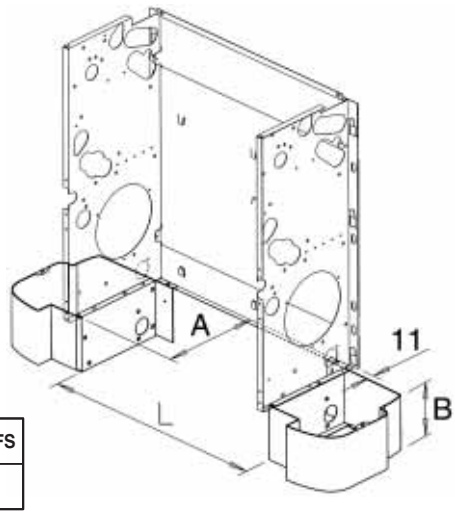


| VERSION | FSC - FST - FSR - CRYSTALL FS |
|---|---|
| *MODEL* | *MV* |

## GAP

Aluminium low intake grid
(to be installed with PAP - PAC feet)

| VERSION | FSC - FST - CRYSTALL FS |
|---|---|
| *MODEL* | *MV* |

| SIZE | 1 | 2 | 3 - 4 | 5 - 6 - 7 |
|---|---|---|---|---|
| CODE | 9060230 | 9060231 | 9060232 | 9060233 |

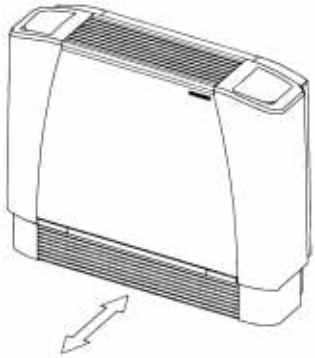

## SAE fresh air mixing damper (can be motorized on request)

| VERSION | | A | L | CODE |
|---|---|---|---|---|
| FSC - FST | 1 | 185 | 454 | 6060410 |
| FSC - FST | 2 | 185 | 669 | 6060411 |
| FSC - FST | 3-4 | 185 | 884 | 6060412 |
| FSC - FST | 5 | 185 | 1099 | 6060413 |
| FSC | 6-7 | 215 | 1099 | 6060414 |

| VERSION | FSC - FST - CRYSTALL FS |
|---|---|
| *MODEL* | *MV - IV - IO* |

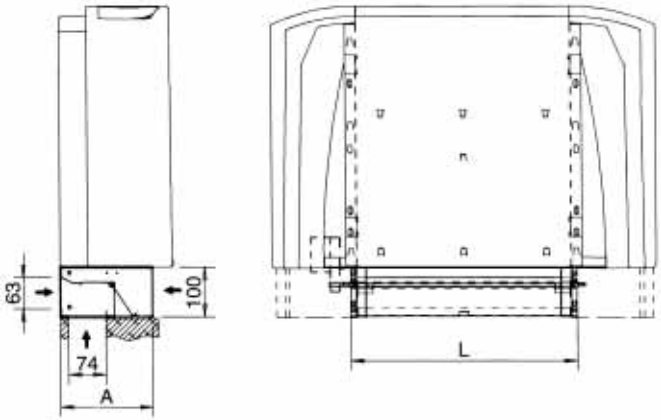


## PCV rear closing panel

| VERSION | FSC - FST - FSR - CRYSTALL FS |
|---|---|
| *MODEL* | *MV - MVB* |

| VERSION | | CODE |
|---|---|---|
| – | FSR 1 | 9062005 |
| FSC - FST 1 | FSR 2 | 9060180 |
| FSC - FST 2 | FSR 3 | 9060181 |
| FSC - FST 3-4 | FSR 4 | 9060182 |
| FSC - FST 5-6-7 | – | 9060183 |

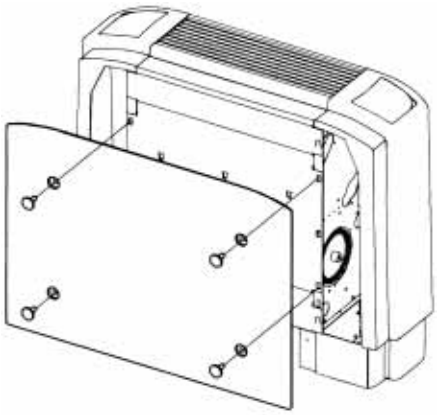

## PCO bottom closing panel

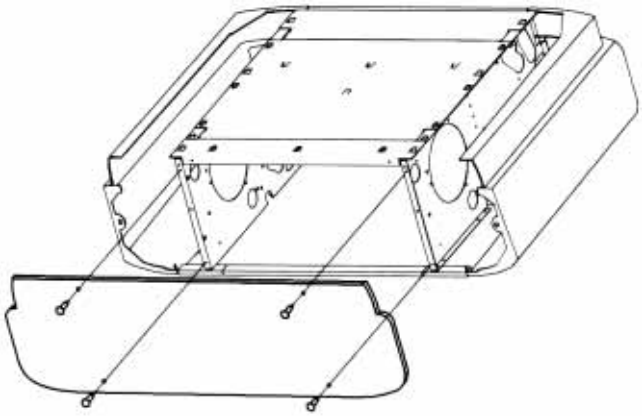

| VERSION | FSC - FST |
|---|---|
| *MODEL* | *IV - IO* |

| TAILLE | 1 | 2 | 3 - 4 | 5 | 6 - 7 |
|---|---|---|---|---|---|
| CODE | 9060190 | 9060191 | 9060192 | 9060193 | 9060194 |

## KAF frontal intake kit

Bottom closing panel and filter sliding guides

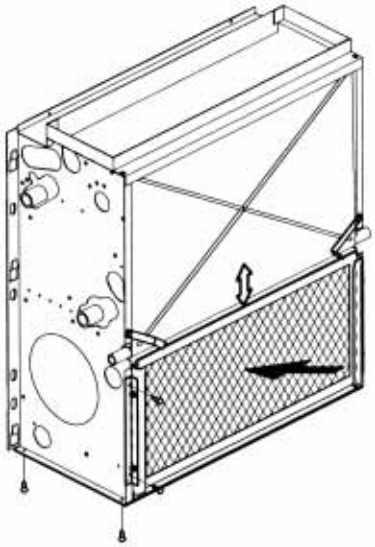

| VERSION | FSC - FST |
|---|---|
| *MODEL* | *IV - IO* |

| TAILLE | 1 | 2 | 3 - 4 | 5 | 6 - 7 |
|---|---|---|---|---|---|
| CODE | 9060220 | 9060221 | 9060222 | 9060223 | 9060224 |

## FRD straight inlet flange

Can be used together with GRAG air inlet grid.
Made of galvanized steel.

| VERSION | FSC - FST |
|---|---|
| *MODEL* | *IV - IO* |

| SIZE | TYPE | A | B | C | D | G | CODE |
|---|---|---|---|---|---|---|---|
| 1 | FRD - 1 | 454 | 390 | 32 | 217 | 16 | 9060720 |
| 2 | FRD - 2 | 669 | 590 | 39,5 | 217 | 16 | 9060721 |
| 3 - 4 | FRD - 3/4 | 884 | 790 | 47 | 217 | 16 | 9060722 |
| 5 | FRD - 5 | 1099 | 990 | 54,5 | 217 | 16 | 9060723 |
| 6 - 7 | FRD - 6/7 | 1099 | 990 | 54,5 | 247 | 46 | 9060724 |


## FR 90 90° inlet flange

Can be used together with GRAP air inlet grid.
Made of galvanized steel.

| VERSION | FSC |
|---|---|
| *MODEL* | *IV - IO* |

| SIZE | TYPE | A | B | C | D | E | CODE |
|---|---|---|---|---|---|---|---|
| 1 | FR90 - 1 | 454 | 390 | 32 | 216 | 11 | 9060710 |
| 2 | FR90 - 2 | 669 | 590 | 39,5 | 216 | 11 | 9060711 |
| 3 - 4 | FR90 - 3/4 | 884 | 790 | 47 | 216 | 11 | 9060712 |
| 5 | FR90 - 5 | 1099 | 990 | 54,5 | 216 | 11 | 9060713 |
| 6 - 7 | FR90 - 6/7 | 1099 | 990 | 54,5 | 246 | 41 | 9060714 |

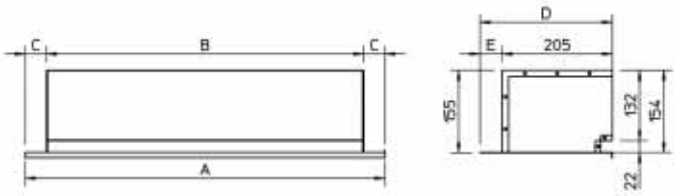

## GRAP air inlet grid

To be used with FR 90 90° inlet flange. Made of anodized aluminium.

| VERSION | FSC |
|---|---|
| *MODEL* | *IV - IO* |

| SIZE | TYPE | DESCRIPTION | B | CODE |
|---|---|---|---|---|
| 1 | GRAP - 1 | Grid 400x150 | 375 | 9060760 |
| 2 | GRAP - 2 | Grid 600x150 | 575 | 9060761 |
| 3 - 4 | GRAP - 3/4 | Grid 800x150 | 775 | 9060762 |
| 5 - 7 | GRAP - 5/7 | Grid 1000x150 | 975 | 9060763 |

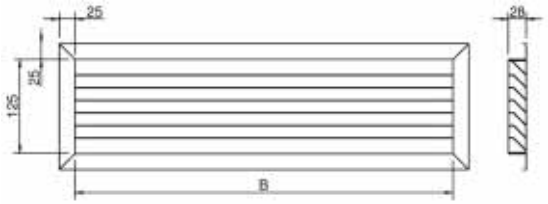


## GRAG air inlet grid

To be used with FRD straight inlet flange. Made of anodized aluminium.

| VERSION | FSC - FST |
|---|---|
| *MODEL* | *IV - IO* |

| SIZE | TYPE | DESCRIPTION | B | CODE |
|---|---|---|---|---|
| 1 | GRAG - 1 | Grid 400x200 | 375 | 9060764 |
| 2 | GRAG - 2 | Grid 600x200 | 575 | 9060765 |
| 3 - 4 | GRAG - 3/4 | Grid 800x200 | 775 | 9060766 |
| 5 - 7 | GRAG - 5/7 | Grid 1000x200 | 975 | 9060767 |

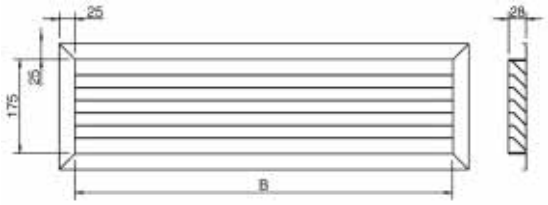


## FMD straight outlet flange

Made of galvanized steel.

| VERSION | FSC - FST |
|---|---|
| *MODEL* | *IV - IO* |

| SIZE | TYPE | A | B | C | D | E | CODE |
|---|---|---|---|---|---|---|---|
| 1 | FMD - 1 | 454 | 390 | 32 | 55 | 205 | 9060730 |
| 2 | FMD - 2 | 669 | 590 | 39,5 | 55 | 205 | 9060731 |
| 3 - 4 | FMD - 3/4 | 884 | 790 | 47 | 55 | 205 | 9060732 |
| 5 | FMD - 5 | 1099 | 990 | 54,5 | 85 | 205 | 9060733 |
| 6 - 7 | FMD - 6/7 | 1099 | 990 | 54,5 | 85 | 235 | 9060734 |

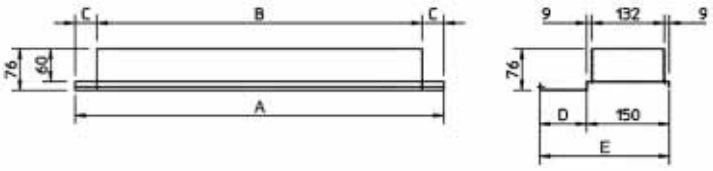


## FM 90 90° straight outlet flange

Made of galvanized steel insulated with polyethylene lining.

| VERSION | FSC |
|---|---|
| *MODEL* | *IV - IO* |

| SIZE | TYPE | A | B | C | D | E | CODE |
|---|---|---|---|---|---|---|---|
| 1 | FM90 - 1 | 454 | 390 | 32 | 205 | 55 | 9060700 |
| 2 | FM90 - 2 | 669 | 590 | 39,5 | 205 | 55 | 9060701 |
| 3 - 4 | FM90 - 3/4 | 884 | 790 | 47 | 205 | 55 | 9060702 |
| 5 | FM90 - 5 | 1099 | 990 | 54,5 | 205 | 55 | 9060703 |
| 6 - 7 | FM90 - 6/7 | 1099 | 990 | 54,5 | 235 | 85 | 9060704 |

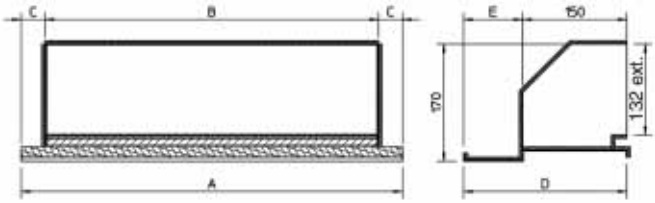


## BMA air outlet grid

Double louvre grid to be fitted to the duct, to the FMD straight outlet flange or to the FM 90 90° outlet flange. Made of anodized aluminium.

| VERSION | FSC - FST |
|---|---|
| *MODEL* | *IV - IO* |

| SIZE | TYPE | B | CODE |
|---|---|---|---|
| 1 | BMA - 1 | 375 | 9060750 |
| 2 | BMA - 2 | 575 | 9060751 |
| 3 - 4 | BMA - 3/4 | 775 | 9060752 |
| 5 - 7 | BMA - 5/7 | 975 | 9060753 |

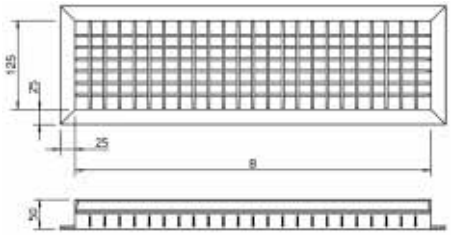


## PRC air inlet spigot plenum

Made of galvanized steel insulated with polyethylene lining.

All the plenums are supplied with spigots for the connection of flexible ducts.

| VERSION | FSC |
|---|---|
| *MODEL* | *IV - IO* |

| SIZE | TYPE | A | B | C | SPIGOTS | | CODE |
|---|---|---|---|---|---|---|---|
| | | | | | N° | Ø | |
| 1 | PRC - 1 | 432 | 112 | 216 | 2 | 150 | 9060780 |
| 2 | PRC - 2 | 647 | 166 | 216 | 2 | 190 | 9060781 |
| 3 - 4 | PRC - 3/4 | 862 | 161 | 216 | 3 | 190 | 9060782 |
| 5 | PRC - 5 | 1077 | 188,5 | 216 | 3 | 190 | 9060783 |
| 6 - 7 | PRC - 6/7 | 1077 | 188,5 | 246 | 3 | 190 | 9060784 |

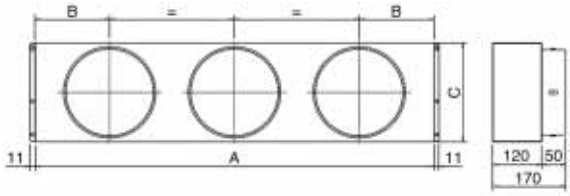

## PMC spigot diffuser

Made of galvanized steel
insulated with polyethylene lining.

All the plenums are supplied with spigots for the connection of flexible ducts.

| VERSION | FSC |
|---|---|
| *MODEL* | *IV - IO* |

| SIZE | TYPE | A | B | C | SPIGOTS N° | SPIGOTS Ø | CODE |
|---|---|---|---|---|---|---|---|
| 1 | PMC - 1 | 432 | 112 | 216 | 2 | 150 | 9060740 |
| 2 | PMC - 2 | 647 | 166 | 216 | 2 | 190 | 9060741 |
| 3 - 4 | PMC - 3/4 | 862 | 161 | 216 | 3 | 190 | 9060742 |
| 5 | PMC - 5 | 1077 | 188,5 | 216 | 3 | 190 | 9060743 |
| 6 - 7 | PMC - 6/7 | 1077 | 188,5 | 246 | 3 | 190 | 9060744 |

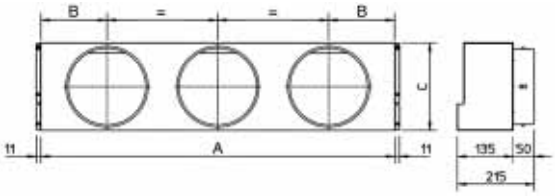


## GRAFP air inlet grid with filter

To be fitted to the FR 90 90° inlet flange.
Made of anodized aluminium.

| VERSION | FSC |
|---|---|
| *MODEL* | *IV - IO* |

| SIZE | TYPE | B | CODE |
|---|---|---|---|
| 1 | GRAFP - 1 | 375 | 9060770 |
| 2 | GRAFP - 2 | 575 | 9060771 |
| 3 - 4 | GRAFP - 3/4 | 775 | 9060772 |
| 5 - 7 | GRAFP - 5/7 | 975 | 9060773 |

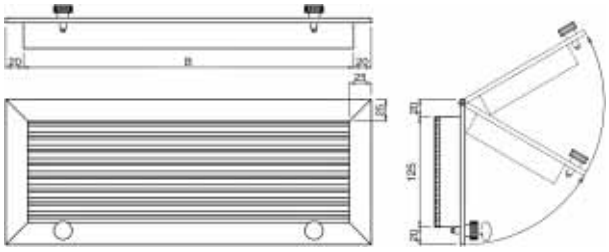

## GRAFG air inlet grid with filter

To be fitted to the FRD straight inlet flange.
Made of anodized aluminium.

| VERSION | FSC |
|---|---|
| *MODEL* | *IV - IO* |

| SIZE | TYPE | B | CODE |
|---|---|---|---|
| 1 | GRAFG - 1 | 375 | 9060774 |
| 2 | GRAFG - 2 | 575 | 9060775 |
| 3 - 4 | GRAFG - 3/4 | 775 | 9060776 |
| 5 - 7 | GRAFG - 5/7 | 975 | 9060777 |

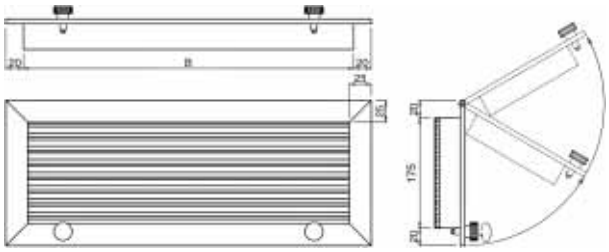

## V2 main and auxiliary 2 way valve

Control valve kit: 2 way valve, ON-OFF,
with electric control and mounting kit.

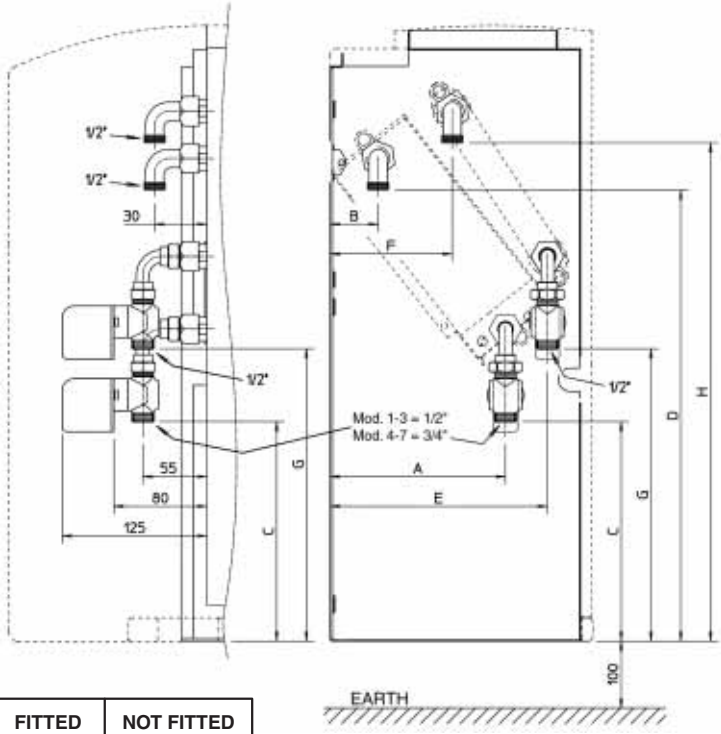


| VERSION | | FSC - FST 1÷ 3 | FSC - FST 4÷ 7 / FSR |
|---|---|---|---|
| FITTED | | 9060278 | 9060279 |
| NOT FITTED | | 9060276 | 9060277 |
| Valve | DN | 15 | 20 |
| | (Ø) | (1/2") | (3/4") |
| | Kvs | 1,7 | 2,8 |

| VERSION | FSC - FST |
|---|---|
| *MODEL* | *MV - MO - IV - IO - MVB* |

| VERSION | A | B | C | D | E | F | G | H | FITTED | NOT FITTED |
|---|---|---|---|---|---|---|---|---|---|---|
| FSC - FST 1 ÷ 3 | 149 | 41 | 180 | 386 | 186 | 103 | 239 | 456 | 9060278 | 9060276 |
| FSC - FST 4 - 5 | 150 | 43 | 181 | 438 | 186 | 103 | 239 | 456 | 9060279 | 9060277 |
| FSC 6 - 7 | 176 | 40 | 175 | 422 | 210 | 104 | 237 | 440 | 9060279 | 9060277 |
| FSR 1 ÷ 4 | 143 | 45 | 178 | 448 | - | - | - | - | 9060279 | 9060277 |

Dimensions: ± 10 mm.

## VSD
## semplified valve kit

3 way valve, (ON-OFF) with electric control and mounting kit.

| VERSION | FSC - FST - CRYSTALL FS |
|---|---|
| *MODEL* | *IV - IO* |

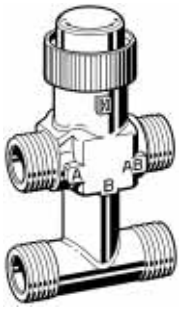


Valve
with flat connection

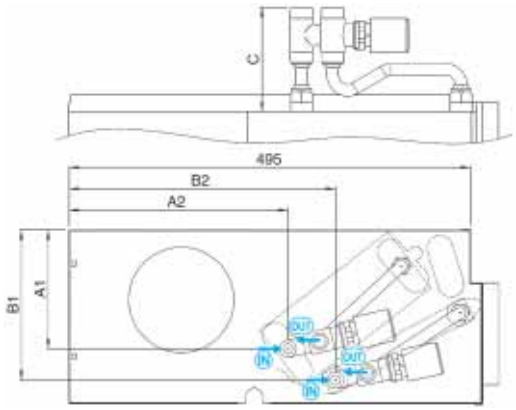


| VERSION | | FSC - FST 1 ÷ 3 AND ADDITIONAL BATTERY | FSC - FST 4 - 5 | FSC 6 - 7 |
|---|---|---|---|---|
| FITTED | | 9060386 | 9060388 | 9060390 |
| NOT FITTED | | 9060385 | 9060387 | 9060389 |
| Valve | DN (Ø) | 15 (1/2") | 20 (3/4") | 20 (3/4") |
| | Kvs | 1,6 | 2,5 | 2,5 |

| | | BATTERY | | | | |
|---|---|---|---|---|---|---|
| | | MAIN | | ADDITIONAL | | |
| VERSION | MODEL | A1 | A2 | B1 | B2 | C |
| FSC - FST | 1 ÷ 3 | 152 | 270 | 185 | 330 | 116 |
| FSC - FST | 4 - 5 | 152 | 268 | 185 | 330 | 124 |
| FSC | 6 - 7 | 177 | 270 | 210 | 327 | 124 |

Dimensions ± 10 mm.

## VBP
## main battery 3 way valve

Control valve kit: 3 way valve, ON-OFF, with electric control and mounting kit with regulating check valve.

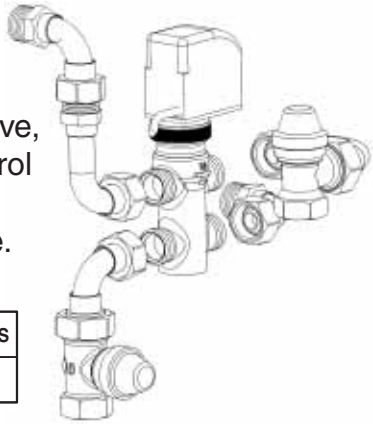

| VERSION | FSC - FST - FSR - CRYSTALL FS |
|---|---|
| *MODEL* | *MV - MO - IV - IO - MVB* |

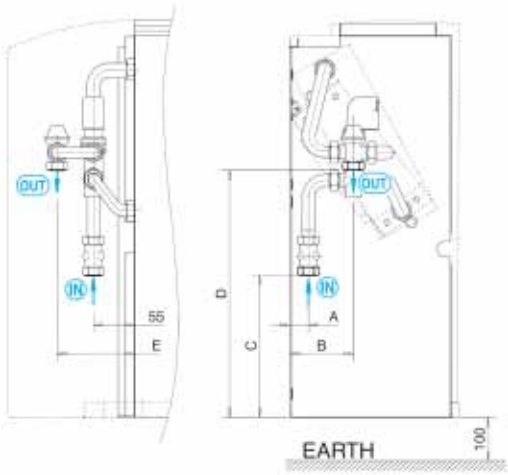


| VERSION | | FSC - FST 1 ÷ 3 | FSC - FST 4 ÷ 7 / FSR |
|---|---|---|---|
| FITTED | | 9060272 | 9060273 |
| NOT FITTED | | 9060270 | 9060271 |
| Valve | DN (Ø) | 15 (1/2") | 20 (3/4") |
| | Kvs | 1,6 | 2,5 |
| Regulating check valve Ø | | 1/2"F | 1/2"F |

| VERSION | MODEL | A | B | C | D | E |
|---|---|---|---|---|---|---|
| FSC - FST | 1 ÷ 5 | 25 | 85 | 190 | 290 | 105 |
| FSC | 6 ÷ 7 | 50 | 120 | 185 | | |
| FSR | 1 ÷ 4 | 15 | 90 | 200 | 315 | 95 |

Dimensions ± 10 mm.

## VBA auxiliary
## battery 3 way valve

Control valve kit:
3 way valve, ON-OFF, with electric control and mounting kit with regulating check valve.

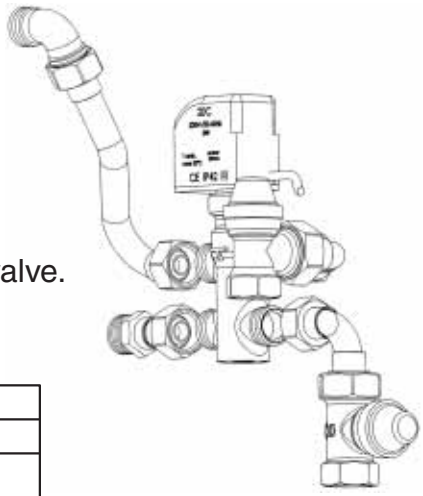

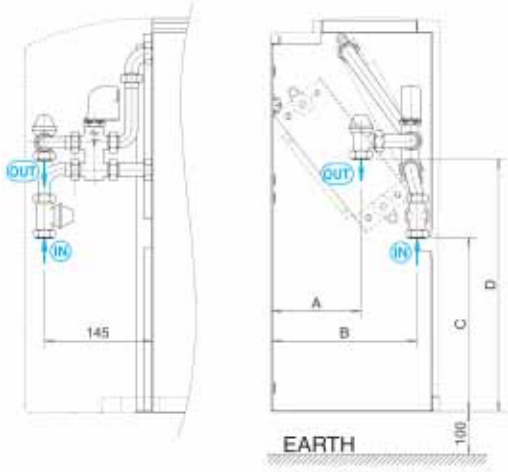


| FITTED | | 9060275 |
|---|---|---|
| NOT FITTED | | 9060274 |
| Valve | DN (Ø) | 15 (1/2") |
| | Kvs | 1,6 |
| Regulating check valve Ø | | 1/2"F |

| VERSION | FSC - FST - CRYSTALL FS |
|---|---|
| *MODEL* | *MV - MO - IV - IO - MVB* |

| VERSION | MODEL | A | B | C | D |
|---|---|---|---|---|---|
| FSC - FST | 1 ÷ 5 | 120 | 195 | 240 | 340 |
| FSC | 6 ÷ 7 | 135 | 200 | 235 | 330 |

Dimensions ± 10 mm.

Crystall

## ELECTROSTATIC FILTER

The **CRYSTALL SABIANA** electrostatic filter matches the need for better air conditioning with the concepts of space and design.
With this filter the various stages of air treatment are combined in one appliance.
Thanks to this new patented filter, air pollutants such as cigarette smoke, dust, pollen and most biological organisms are eliminated.
In addition, as fresh air is not being introduced to obtain the best climatic conditions, there are consequential energy savings.

The patented CRYSTALL SABIANA works on the electrostatic principle that electric charges of opposite polarity attract each other.
When crossing the first filter section the particles in the air pass through an electric field which gives them a positive charge.
In the second filter section the particles are attracted and adhere to the filter plates which have a negative electrostatic charge.
In this way while passing through the filter the air is cleaned and any impurity is removed.

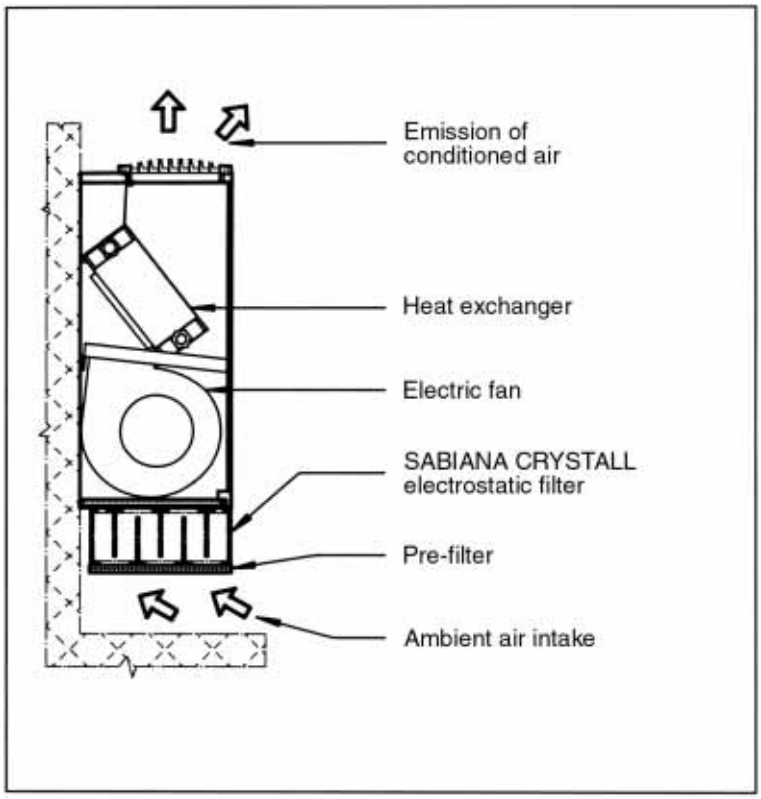


Then the smallest particles (50 ÷ 0.01 µm) are exposed to an intensive ionic field and are polarized.
*(Phase 2)*

The charged particles passing through the second filter section, are pushed back by the anode and attracted to the collection surfaces by a strong, induced magnetic field.
*(Phase 3)*

The air which leaves the unit is free from polluting particles.

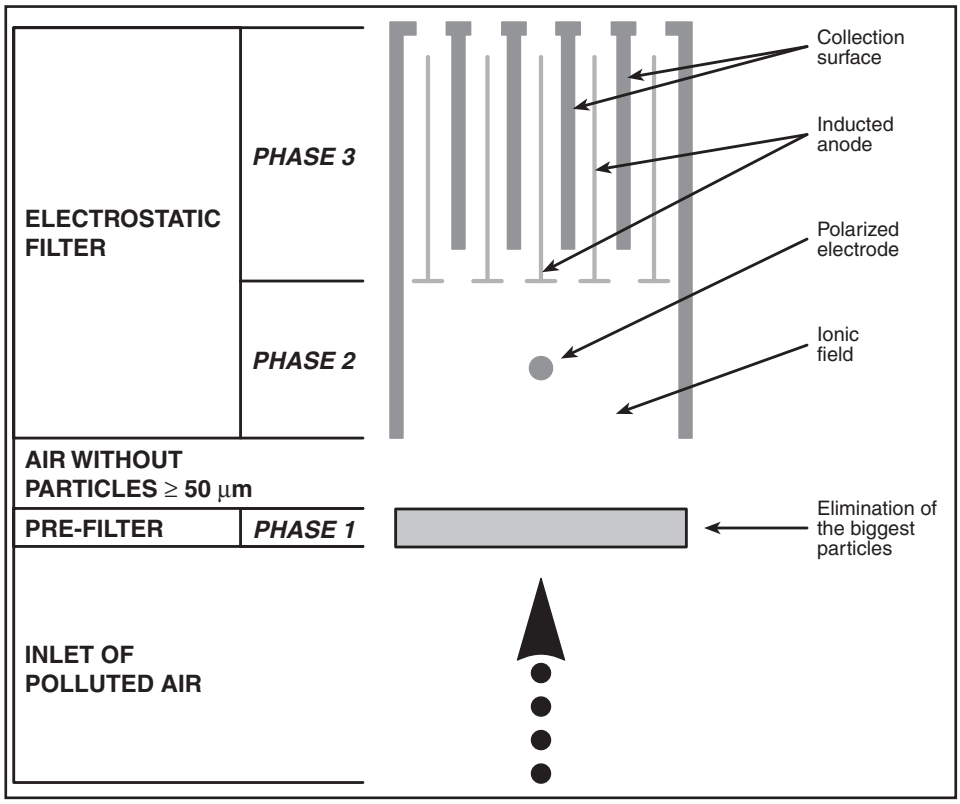

## Indoor Air Quality (IAQ)

The expression Indoor Air Quality (IAQ) covers all the procedures and methodologies used to **improve the quality of the air we breathe** in the places where we live and work, from all points of view, from temperature to cleanliness, from relative humidity to electrical charge, etc.
Thanks to its new patented electronic filter, **the Crystall electrostatic filter totally eliminates the pollutants present in the air**, including tobacco smoke, dust, fibres, microbiological substances such as bacteria, fungi, etc., which are harmful to human health (source: WHO, ≤ PM 2.5).
Purifying the air means not only greater well-being, but also **energy saving**, as the outdoor air changes that are required to restore ideal climatic conditions and that entail greater consumption, are significantly reduced (it is sufficient to enter the quantity of air required to restore the optimum level of $CO_2$ - source: ASHRAE STD 62-89). Moreover, according to the new ASHRAE STD 62-89R, air recirculated by the Crystall appliance can be considered as outdoor air, to be added to the minimum requirements.
Purifying the air with the Sabiana Crystall appliance also **entails no reduction of living room space**, as the dimensions of the fan convector are practically unchanged (just 10 cm higher).
The positioning of the electronic filter allows **simple and effective maintenance** and, as it is easy to wash, **its working life is practically unlimited**. The modularity of the filter components and their ease of mounting make the system extremely competitive in terms of cost compared with other types of filters present on the market. In spring and autumn, if environmental air conditioning/heating is not required, the appliance acts simply as an **air purifier**.

The concentration of particles suspended in one litre of air varies from 4.000, in high mountain areas, to 400.000, in a living room environment. The reference unit used to measure the dimensions of a particle is the micron (µm); 1 µm = 0.001 mm.
The graph on the following page shows the distribution of particles according to their size, weight and quantity.
The dimensions and health risks associated with the particles that are most commonly present in the air are indicated in the table on the following page.
The graph on page 69 illustrates the filtering capacity of the most common filters, depending on particle size.
As can be seen, the electronic filter is the only filter capable of stopping particles with dimensions less than 1 µm (more than 99% of all the particles present in the air) without altering the appliance air flow (additional load losses are in fact negligible).
Absolute mechanical filters cannot be used on the fan convector, as they create unacceptable load losses.
The electrostatically charged polypropylene filtering fabric (passive Electrete type), sometimes used on some appliances, such as fan convectors or Split System units, has a number of disadvantages: it becomes quickly saturated, it becomes less effective in the presence of high levels of humidity, and its high load losses increase as the filter becomes saturated.

## 1) Particle size distribution of atmospheric dust (Source: ASHRAE Handbook Fundamental)

In the diagram there are three different curves that show the particle distribution in accordance to their number (A), area (B) and mass (C). The diagram shows that the 99,9% of the particles in the air is smaller than 1 µm and their mass is only 30% of the total mass. The particles bigger than 1 µm are only 0,1% of the number, but they are 70% of the total mass.

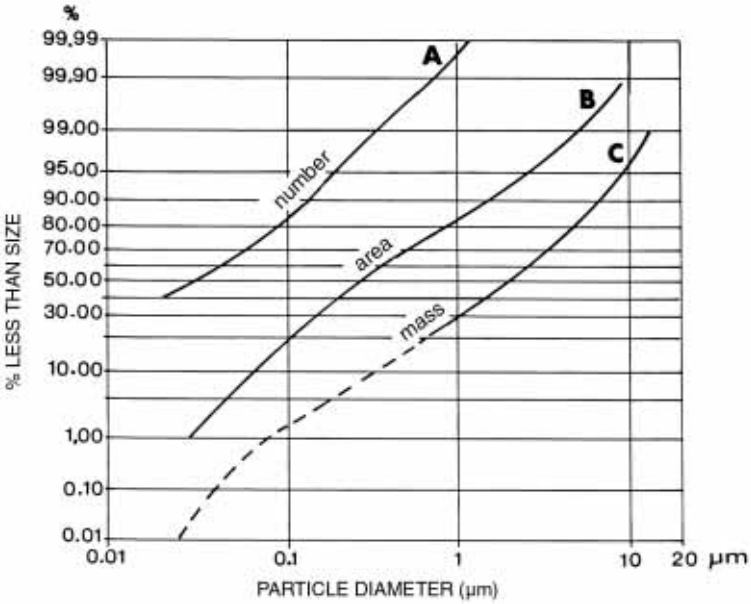


## Table 1.
## Possible indoor concentration of pollutants and its ratio to their outdoor concentration

| pollutants | indoor source | outdoor source | indoor concentration | indoor/outdoor ratio | environments |
|---|---|---|---|---|---|
| carbon monoxide | fuel-burning equipment, internal combustion engines, defective heating boilers | industrial processes, motor traffic, combustion processes | 100 mg/kg 10-100 ppm | >> 1 | houses, offices, shops, cars |
| breathable particles | naked flames, cigarettes, sprays, aerosols, kitchen fumes, condensation of volatile substances | combustion, fragmentation of solid substances of animal, vegetable and mineral origin | 0.1-0.7 mg/m³ | >> 1 | homes, offices, cars, restaurants, bars, public facilitie |
| organic vapours | combustion, solvents, artificial resins, insecticides, aerosols | / / | NA | > 1 | homes, offices, bars, restaurants, public facilities, hospitals |
| nitrogen dioxide | gas ring, water heater, dryer combustion | motor traffic | 0.2-1 mg/m³ | >> 1 | homes |
| sulphur dioxide | heater burners | heating, motor traffic | 0.02 mg/m³ | | |
| total suspended particles without smokers | re-suspension of heating system combustion | / / | 0.1/1 mg/m³ | 1 | homes, offices, restaurants, transport vehicles |
| sulphates | kitchen rings | | 0.005 mg/m³ | < 1 | |
| formaldehyde | insulation items, plastic resins, furniture finishing | / / | 0.05/1 mg/kg | > 1 | homes, offices |
| radon | construction materials, ground, groundwater | / / | 0.1/200 nCI/m³ | >> 1 | cellars, homes, buildings |
| asbestos | insulation and cladding | / / | < $10^6$ fibres m³ | 1 | homes, schools, offices |
| mineral and synthetic fibres | plastics, fabrics, carpets, drapes | fragmentation of solid substances | NA | / / | homes, schools, offices |
| carbon dioxide | combustion, human and animal respiration | / / | 3 g/kg | >> 1 | homes, schools, offices |
| micro-organisms | people, animals, insects, plants, fungi, humidifiers, air conditioners, dehumidifiers | pollen, bacteria, virus | NA | > 1 | homes, schools, hospitals, offices |

## Filtering capacity of the most common filters depending on particle size

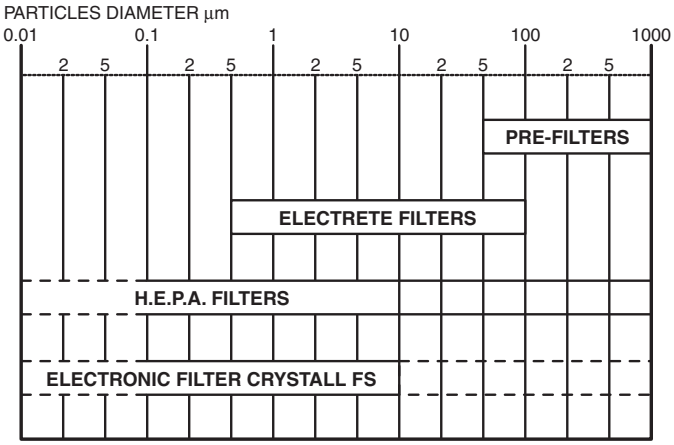


## STANDARD: **ASHRAE 62-1989**

The ASHRAE 62-1989 Standard defines as "acceptable" air in a closed environment that does not contain any concentrations of known pollutants that could entail health risks for the people present and such that more than 80% of those present do not express any dissatisfaction. The simplest way to obtain the required air quality is to dilute the pollutants present with outdoor air. The quantity of outdoor air required is indicated in the table, reproduced on the next page, according to the ASHRAE 62-1989 Standard.

As can be easily understood, the more outdoor air is brought into the environment the more energy costs increase to achieve ideal climatic conditions. The table reproduced at the bottom of the page shows how, with adequate air filtering, it is possible to decrease considerably the quantity of outdoor air to be brought into the environment (up to 4-5 times less); the thermal energy dissipated due to ventilation is in fact in direct proportion to the number of air changes, as indicated in the following equation:

$$Qv = \Delta T \cdot \frac{R}{3600} \cdot D \cdot C \cdot Vol.$$

| | | | |
|---|---|---|---|
| Qv | = | Thermal energy lost for ventilation | - Watt |
| ΔT | = | Indoor-Outdoor difference (T) | - °C |
| R | = | A.C.H. | |
| D | = | Air density | - Kg/m³ |
| C | = | Specific air heat | - J/Kg-°C |
| Vol | = | Room size | - m³ |

## Outdoor air according to standards STD ASHRAE 62-89 and 62-89R

| Environment | ASHRAE 62-89 | | ASHRAE 62-89R (DVR) | | |
|---|---|---|---|---|---|
| | m³/h pers. | m³/h m² | m³/h pers. (Rp) | m³/h m² (Rb) | Diversity (D) |
| Office space | 36 | - | 10,8 | 1,26 | 1 |
| Conference rooms | 36 | - | 9 | 1,26 | 1 |
| Retail sales floor | - | 0,9 to 5,4 | 12,6 | 3,06 | 0,75 |
| General classrooms | 28,8 to 36 | - | 10,8 | 1,98 | 1 |

## Example of energy saving in accordance to the new ASHRAE 62-89R standard

**MSR:** Minimum Supply Rate
**DVR:** Design Ventilation Rate

When the minimum outdoor air flow is lower than the minimum supply rate (**DVR<MSR**), is possible to use a recirculation system to integrate and satisfy the requested quantity.

**MSR = (DVR + Vr)**

**Vr – 100 . (MSR – DVR) / Ef (m³/h)**

**Vr**: filtered ricirculated air
**Ef**: filter efficiency for ≤ 3 micron particles

**EXAMPLE**: Parameters assumed are:

| | | | |
|---|---|---|---|
| Office space: | **Ab** = | area 20 m² | |
| | **Rb** = | 1,26 m³/h per m² | (ASHRAE 62-89R) |
| N° of people: | **Pd** = | n° 4 | |
| | **Rp** = | 10,8 m³/h per person | (ASHRAE 62-89R) |
| | **D** = | 1 | |

Where:
**Rp**: minimum outdoor air per person
**Pd**: number of people (occupant)
**D**: Diversity factor
**Rb**: minimum outdoor air per building component
**Ab**: building area

**DVR = (Rp . Pd . D) + (Rb . Ab)**
**(10,8 x 4 x 1) + (1,26 x 20) = 68,4** m³/h **MSR = ≥ 27** m³/h per person

**68,4 : 4 = 17,1** m³/h per person < of **27** m³/h minimum requested

in fact: **MSR** = 27 x 4 = 108 m³/h required
difference: 108 - 68,4 = **39,6** m³/h
If the design ventilation rate to a space is less than MSR per person, filtered recirculated air must be added to compensate using the following formula:

**Vr = 100 . [(27 . Pd . D) - DVR] / Ef**

**100 x (108 - 68,4) / 80 = 49,5** m³/h **recirculated air**

By **STD ASHRAE 62-89R**:

- ❏ **68,4** m³/h outdoor air (144 m³/h STD 62-89)
- ❏ **49,5** m³/h air filtered and recirculated by CRYSTALL

Therefore, installing an air circulation system with the CRYSTALL-SABIANA electronic filter, the energy saving that can be achieved is remarkable.
In fact, only 68,4 m³/h of outdoor air is necessary, instead of 144 m³/h in case of total fresh air intake in accordance to STD ASHRAE 62-89 (see TAB page 69).

## Calculation Procedure for choosing the model and number of CRYSTALL appliances required

The formulas to be used to calculate the number and model of units required to obtain the desired air cleanliness are indicated below. This rigorous method should be applied whenever the concentrations of pollutants and the number of people present in the room are known.

If these values are not known, the table reproduced on page 78, which refers to situations that are considered standard with a certain kind of pollutant in relation to the total room volume, can be used.

Cigarette smoke is the most common pollutant and also the most difficult to filter, as the dimensions of the component particles are less than 1 µm. This kind of pollutant is taken into account by us for the following calculations.

## CALCULATION METHOD (according to STD ASHRAE 62-89)

Let us assume that a room is to be used as an office. It has a given volume and is occupied by a number of people, some of whom are smokers. This entails the production of pollutant (in this case, cigarette smoke). Let us now quantify the quantity of outdoor air (Vo = $m^3$/min.) required to dilute the particles (µg/$m^3$) restoring the normal level of $CO_2$ (%), so that the air is not considered unsatisfactory by the majority of the occupants.

The ASHRAE 62-1989 Standard requires, for this kind of room (office), a minimum input of outdoor air amounting to 0.6 $m^3$/min. per person (see table on page 69), if the production of the pollutant is limited.

As we will see in our example, this value is completely insufficient if 50% of the occupants are smokers with a consumption of 1 cigarette per hour per person. The quantity of outdoor air required by the ASHRAE standard is sufficient to maintain a concentration of $CO_2$ below 0.1% in a room where physical activity is carried on equal to 1.2 MET (see graph N°2 on page 72), but is not sufficient to restore the concentration of pollutant to the required level.

## Calculation

### DIMENSIONING ITEM

| | | |
|---|---|---|
| Occupancy category | OFFICE | |
| Building size | Vol | 70 $m^3$ |
| Number of occupants | | 4 |
| % smokers | % | 50 |
| Number of cigarettes/hour/smoker | | 1 |
| Pollutant outdoor air concentration | Co | 10 µg/$m^3$ (outdoor air filtered) |
| Outdoor air/person | Vo | 0.6 $m^3$/min. |

### REQUESTED CONCENTRATIONS

| | |
|---|---|
| Carbon dioxide ($CO_2$) | 0.1% (1.000ppm) (MAX ASHRAE STD 62-89) |
| Indoor particle concentration | 60 µg/$m^3$ MAX (< PM 10 -WHO-) |

## 2) $CO_2$ room concentration with different outdoor air flows

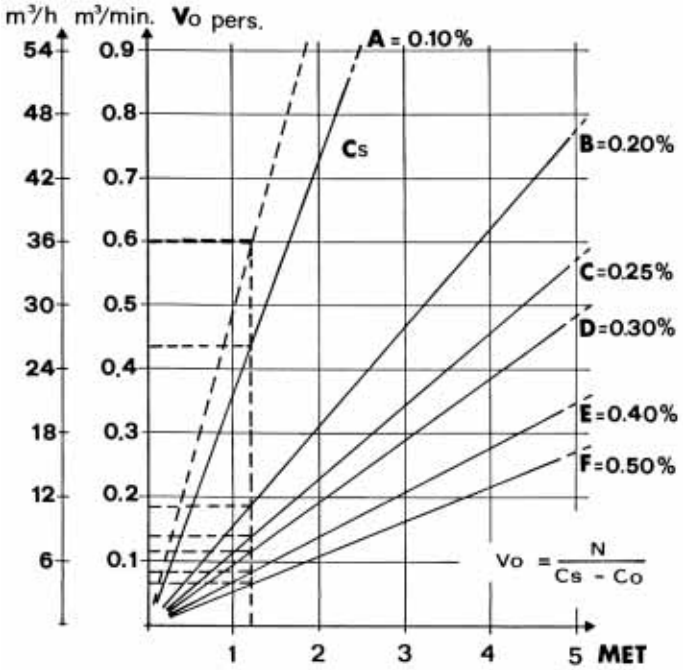


| | | | | | | | | | |
|---|---|---|---|---|---|---|---|---|---|
| $C_S$ = | 1000 | ppm | = | 26 | m³/h | person | (Vo) | (A) | *Example* |
| = | 2000 | " | = | 11 | " | person | " | (B) | *of the concentration of $CO_2$* |
| = | 2500 | " | = | 8.5 | " | person | " | (C) | *with a phisical activity* |
| = | 3000 | " | = | 7 | " | person | " | (D) | *of 1.2 MET.* |
| = | 4000 | " | = | 5 | " | person | " | (E) | |
| = | 5000 | " | = | 4 | " | person | " | (F) | *(1 MET = 18.4 BTU/h per Ft²)* |

## 3) Pollutant production rate from cigarette smoke

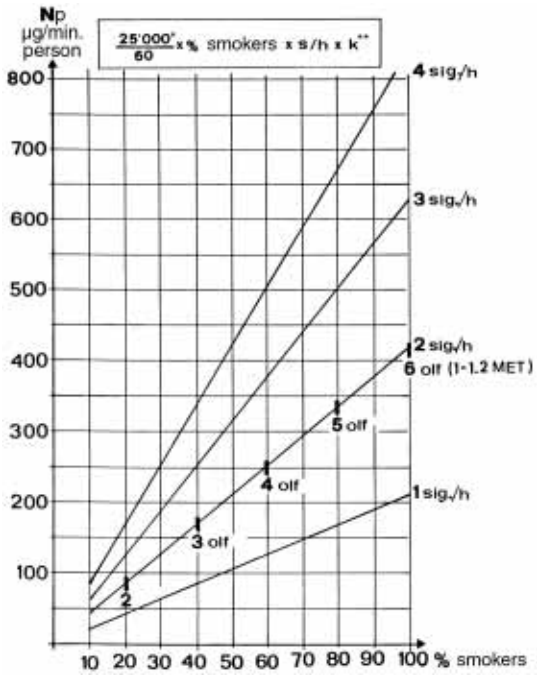


* = Average quantity per cigarette of particulate (Leaderer and Cain 1983)
** = K empirical constant (setting and plating factor A.E.Wheeler 1988)

## Answer

**TO ACHIEVE THE REQUIRED ACCEPTABILITY VALUES IN THE AIR IN THE ROOM, TWO POSSIBLE SOLUTIONS WILL BE ANALYSED**

***Solution "A"*** - The required concentrations of pollutants will be obtained only through dilution by bringing into the room a certain quantity of outdoor air (Vo) which, in turn, contains a concentration of particles: 10 µg/m³ (Co).

*THEREFORE:* Outdoor air flow rate? (Vo=m³/min)
Supply air flow rate? (Vs=m³/min)

***Solution "B"*** - The required concentrations of pollutants will be obtained by recirculating the internal air (Vr) and filtering it through the CRYSTALL FS electronic filter that, with particles < 1 µm (cigarette smoke), has an instrumental efficiency (η) of 90% (Ef). With this solution, the quantity of outdoor air (Vo) required is only that necessary to dilute the $CO_2$.

*THEREFORE:* Outdoor air flow rate? (Vo=m³/min)
Recirculated air flow rate? (Vr=m³/min)
Supply air flow rate (Vo+Vr)? (Vs=m³/min)
Crystall dimensions and size

## System type

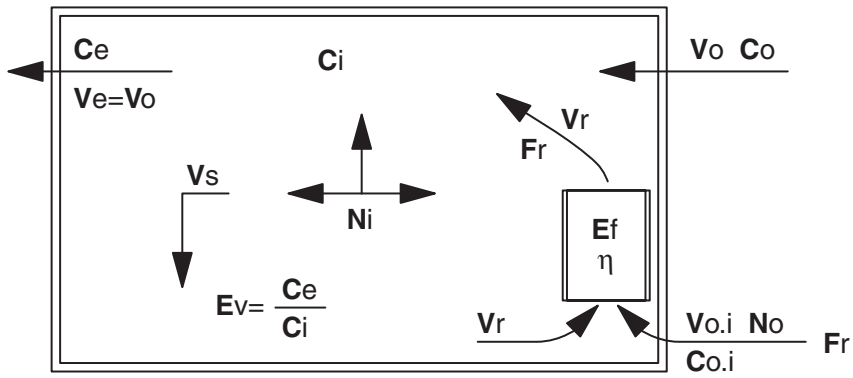


| | | | |
|---|---|---|---|
| Ce | = | Contaminate concentration (exhaust air flow) | µg/m³ |
| Co | = | Contaminate concentration (outdoor air) | µg/m³ |
| Ci | = | Contaminate concentration (indoor air) | µg/m³ |
| Ef | = | Filter effectiveness | % |
| Ev | = | Ventilation effectiveness | 0 to 1 |
| Fr | = | Flow reduction factor | 0 to 1 |
| Ni | = | Contaminant generation rate (indoor) | µg/min. |
| No | = | Contaminant generation rate (outdoor) | µg/min. |
| Ve | = | Exhaust air flow | m³/min. |
| Vo | = | Outdoor air flow | m³/min. |
| Vs | = | Supply air flow (Vr + Vo) | m³/min. |
| Vr | = | Return air flow | m³/min. |
| Vol | = | Building size | m³ |

## SOLUTION "A"

Using the sizing data and graph 3 on page 72, the production of pollutant (smoke) per person (Np) or per $m^3$ (N), must be calculated; we will thus obtain the total indoor production of particles (Ni).

Therefore: 4 people, 50% smokers, 1 cigarette/hour, Vol. 70$m^3$

(Np) 105 µg/min. per person ..... 105x4=420 µg/min. (Ni)
(N) 6 µg/min. per $m^3$ ..... 70x6=420 µg/min. (Ni)

Ci = N·T =6x60 =360 µg/$m^3$ where T=60 minutes (1 hour)

Therefore, after one hour we will have a concentration of pollutant particles equal to 360 µg per $m^3$. The quantity of outdoor air (Vo) necessary to reduce the concentration from 360 µg/$m^3$ to the required level of 60 µg/$m^3$ (Ci), keeping in mind however that the concentration of the outdoor air brought into the room is 10 µg/$m^3$ (Co), can be calculated using the following formula (ASHRAE standard 62/89) which is applicable once the masses have been balanced.

$$Vo = \frac{Ni}{Ci-Co} = \frac{420}{60-10} = 8.4\ m^3/min.$$

Thus,

$$Ci = Co + \frac{Ni}{Vo} = 10 + \frac{420}{8.4} = 60\ \mu g/m^3$$

With this value of Vo, we obtain a concentration of $CO_2$ that is much lower than the required level of 0.1% (indeed, 0.43 $m^3$/min. would be sufficient, as may be seen in graph 2 on page 72). In the rest of the calculation, we want to find out how long it takes to reduce the concentration of pollutant from 360 to 60 µg/$m^3$.
The concentration inside the room will stabilise when the internal production of pollutant added to the pollutant present in the outdoor air is equal to the concentration of air discharged.
In this case, the total pollutant (Nt) is equal to *(Ce) = Outdoor concentration.*

To the 6 µg/min. per $m^3$ of pollutant produced by the smokers (N), we must add the pollutant brought in from outdoors (No), which is calculated using the following formula:

$$No = \frac{Co \cdot Vo}{Vol} = \frac{10 \cdot 8.4}{70} = 1.2\ \mu g/min.\ per\ m^3$$

hence the total pollutant (Nt) is:

$$Nt = N + No = 6 + 1.2 = 7.2\ \mu g/min.\ per\ m^3$$

With a ventilation effectiveness (Ev) = 1, we have:

$$Nt = Ce = \frac{Ct \cdot Ve}{Vol} = \frac{360 \cdot 8.4}{70} = 43.2\ \mu g/m^3$$

Initially, the concentration of the pollutant in the discharged air (Nt=Ce) is 43.2 µg/m³.
To balance the masses we need to modify this value to 7.2 µg/m³,
which is the total production:

$$Nt = \frac{Ci \cdot Vo}{Vol} = \frac{60 \cdot 8.4}{70} = 7.2\ \mu g/m^3$$

The time required for this to happen can be calculated by applying the following formula:

$$T = \frac{Log\left\{Cin - \left[Cin \times \left(1 - \frac{FF}{Vol}\right) + Nt\right]\right\} - Log\left(\frac{Ci - Nt}{1 - \frac{FF}{Vol}} - Ci\right)}{Log\ \frac{1}{1 - \frac{FF}{Vol}}} + 1$$

In this specific case, to obtain +5% of the required concentration (Ci=60+3 µg/m³)
the time required in minutes would be:

$$T = \frac{Log\left\{360 - \left[360 \times \left(1 - \frac{8.4}{70}\right) + 7.2\right]\right\} - Log\left(\frac{63 - 7.2}{0.88} - 63\right)}{Log\ \frac{1}{0.88}} + 1 = 36\ min.$$

where FF (filtering factor) = Vo·η=8.4·1=8.4

The time required to reduce the particles is directly proportional to the total output (Ni) and inversely proportional to the filtering factor (FF).

In conclusion, to reduce the initial concentration from 360 µg/m³(Cin) to the required value of 60 µg/m³ (Ci) with a concentration of $CO_2$ below the required 0.1% (see graph 2 on page 72), 8.4 m³/min. of outdoor air is required, i.e., 2.1 m³/min. per person (8.4:4).

Diluting the pollutants with air for renewal only, the total air flow (Vs) will be equal to the outdoor air flow (Vs=Vo).

## SOLUTION "B"

Using the CRYSTALL-SABIANA filter air conditioner fitted with an electronic filter capable of stopping particles with a size less than 1 µm (smoke), with an efficiency η 90% (Ef=0.9) only the minimum quantity of outdoor air required by the ASHRAE Standard 62-89 will be used, i.e., 0.6 m³/min. per person (see page 69).
Indeed, this minimum quantity can maintain the level of $CO_2$ below 0.1% as required and as shown in graph 3 (see page 72).

The required concentration of particles is obtained by recirculating the indoor air and filtering it.

The quantity of recirculated air (Vr) and the efficiency of the electronic filter (Ef) will allow the choice of the CRYSTALL filter air conditioner best suited for the purpose by applying the following formulas:

$$Vr = \frac{Ni - Vo \cdot Ev\,(Ci - Co)}{Fr \cdot Ev \cdot Ef \cdot Ci} = \frac{420 - 0.6 \cdot 4\,(60 - 10)}{0.6 \cdot 0.9 \cdot 60} = 9.25\ m^3/min.$$

$$Ci = \frac{Ni + Ev \cdot Vo \cdot Co}{Ev \cdot (Vo + Vr \cdot Ef \cdot Fr)} = \frac{420 + 2.4 \cdot 10}{2.4 + 9.25 \cdot 0.9 \cdot 0.6} = 60\ \mu g/m^3$$

The outdoor air intake therefore decreases from 2.1 m³/min. per person to 0.6 m³/min. per person.

Where: Fr = running time of CRYSTALL (0.6=60%)
Ev = ventilation effectiveness (Ce:Ci=1)
Vo = outdoor air flow 0.6 m³/min. per person (0.6·4=2.4)

As in the previous case, the time required to obtain 5% more than the required concentration (60+3=63 µg/m³).

$$T = \frac{Log\left\{360 - \left[360x\left(1 - \frac{10.73}{70}\right) + 18\right]\right\} - Log\left(\frac{63 - 7.2}{0.847} - 63\right)}{Log\ \frac{1}{0.847}} + 1 = 18\ min.$$

The filtering factor should be calculated as follow:

$$FF = Vr \cdot Vo = 9.25 \cdot 0.9 + 2.4 = 10.73$$

The 9.25 m³/min. of recirculated air (Vr) required to maintain the internal concentration of particles (Ci) to the required value may be generated by the following CRYSTALL filter air conditioners:

1°) 1 size 3 FSC unit at max speed 1x10=10 m³/min.
2°) 2 size 1 FSC units at max speed 2x5=10 m³/min.
3°) 2 size 2 FSC units at max speed 2x6=12 m³/min.

If size 2 CRYSTALL appliances are used at the highest speed and therefore with a delivery value of 7.5 m³/min., there should be an increase in the speed of particle reduction, thus:

FF = 15 · 0.9 + 2.4 = 15.9

which would lead to a reduction of the final Ci, or to the achievement of the required concentration in less time.

Thus:

$$T = \frac{\mathrm{Log}\left\{360 - \left[360x\left(1 - \frac{15.9}{70}\right) + 7.2\right]\right\} - \mathrm{Log}\left(\frac{63 - 7.2}{0.773} - 63\right)}{\mathrm{Log}\ \frac{1}{0.773}} + 1 = 8.47 \text{ min.}$$

## CRYSTALL with outdoor air intake damper

If the CRYSTALL filter air conditioner is fitted with an outdoor air mixing and intake damper, the air renewal quantity (Vos) will increase, in inverse proportion to the air flow reduction factor (Fr), or:

Vos = Vo : Fr = 2.4 : 0.6 = 4 m³/min. (Fr 0.6=60%)

Therefore, the air recirculation quantity (Vrs) is modified and becomes:

$$Vrs = \frac{N - Vos \cdot Fr \cdot [Ci - (1 - Ef) \cdot Co]}{Fr \cdot Ef \cdot Ci} =$$

$$= \frac{420 - 4 \cdot 0.6 \cdot (60 - 0.1 \cdot 10)}{0.6 \cdot 0.9 \cdot 60} = 8.6 \text{ m}^3\text{/min.}$$

The fan convector must dove the total air quantity (Vs) which corresponds to the sum of the recirculated air plus the outdoor air and, therefore:

Vs = Vrs + Vos = 8.6 + 4 = 12.6 m³/min.

## Comparison

| SOLUTIONS | | OUTDOOR AIR | | RECIRCULATED AIR FLOW | | SUPPLY AIR FLOW | | CRYSTALL FSC-FST SELECTION | | | |
|---|---|---|---|---|---|---|---|---|---|---|---|
| | | Vo | Fr | Vr | Fr | Vs | Fr | MOD. 1 | MOD. 2 | MOD. 3 | MOD. 4 |
| A | 100% outdoor air | 8.4 | 1 | - | - | 8.4 | 1 | - | - | - | - |
| B | with CRYSTALL | 2.4 | 1 | 9.25 | 0.6 | 11.65 | 0.6 | N° 2 max speed | N° 2 av. speed | N° 1 max speed | N° 1 av. speed |
| B | with CRYSTALL + DAMPER | 4 | 0.6 | 6 | 0.6 | 12.6 | 0.6 | N° 2 max speed | N° 2 av. speed | N° 1 max speed | N° 1 av. speed |

## 4) Graph illustrating particle reduction time with the two solutions proposed

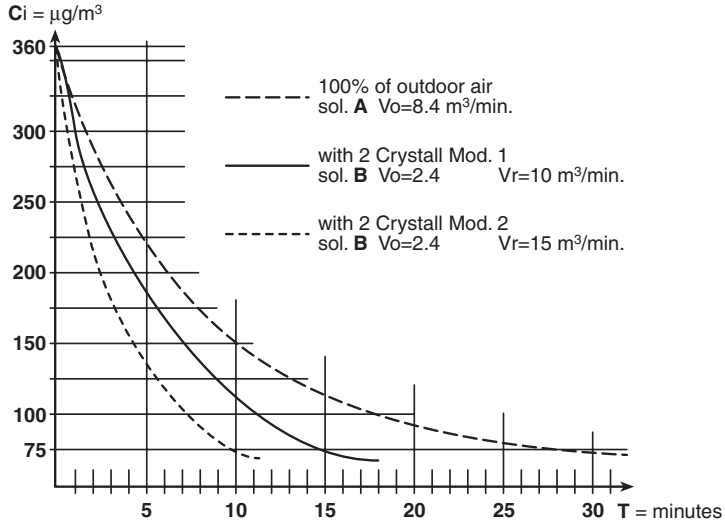


## Simplified method for choosing equipment

The following table, based on the size of the room and the number of people present, allows you to choose the most suitable size assuming the existence of certain pollution conditions.
It should be noted that if the convector fan is fitted with a water delivery valve, a smaller sized unit can be chosen because, as the fan is always on, filtering effectiveness increases (Fr=1).

*Smokers 50%*
*1 cigarette/hour per smoker*
*Concentration required $CO_2$ = 0.1%*
*Particle concentration required = 60 µg/m³*

| CRYSTALL FSC-FST | | | CRYSTALL FSR | | | WITHOUT VALVE | | WITH VALVE | |
|---|---|---|---|---|---|---|---|---|---|
| SIZE | MOTOR SPEED | AIR FLOW m³/h | SIZE | MOTOR SPEED | AIR FLOW m³/h | NUMBER OF OCCUPANTS max | BUILDING * SIZE (m³) max | NUMBER OF OCCUPANTS max | BUILDING * SIZE (m³) max |
| | | | FSR 1 | min | 110 | 1 | 30 | 2 | 30 |
| | | | | med | 150 | 1 | 40 | 2 | 40 |
| | | | | max | 180 | 1 | 45 | 2 | 45 |
| | | | FSR 2 | min | 160 | 1 | 42 | 2 | 42 |
| FSC-FST 1 | min | 190 | | med | 200 | 2 | 50 | 3 | 50 |
| | med | 240 | | max | 250 | 2 | 65 | 3 | 65 |
| | max | 300 | | | | 2 | 75 | 4 | 75 |
| | | | FSR 3 | min | 230 | 2 | 60 | 3 | 60 |
| FSC-FST 2 | min | 290 | | med | 290 | 2 | 73 | 4 | 73 |
| | med | 360 | | max | 360 | 3 | 90 | 5 | 90 |
| | max | 450 | | | | 4 | 115 | 6 | 115 |
| | | | FSR 4 | min | 320 | 3 | 80 | 4 | 80 |
| FSC-FST 3 | min | 380 | | med | 400 | 3 | 100 | 5 | 100 |
| | med | 480 | | max | 500 | 4 | 125 | 6 | 125 |
| | max | 600 | | | | 5 | 150 | 8 | 150 |
| FSC-FST 4 | min | 480 | | | | 4 | 120 | 6 | 120 |
| | med | 600 | | | | 5 | 150 | 8 | 150 |
| | max | 750 | | | | 6 | 190 | 10 | 190 |
| FSC-FST 5 | min | 650 | | | | 5 | 170 | 8 | 170 |
| | med | 800 | | | | 6 | 200 | 10 | 200 |
| | max | 1000 | | | | 8 | 250 | 12 | 250 |
| FSC 6 | min | 750 | | | | 6 | 190 | 10 | 190 |
| | med | 950 | | | | 7 | 240 | 12 | 240 |
| | max | 1200 | | | | 9 | 300 | 15 | 300 |
| FSC 7 | min | 850 | | | | 7 | 220 | 11 | 220 |
| | med | 1100 | | | | 8 | 280 | 14 | 280 |
| | max | 1400 | | | | 11 | 350 | 17 | 350 |

* Assumption with an average air charge of 4 volumes/hour.

**N.B.:** In the case of the fan convector not fitted with a valve, it is assumed that the motor will be running 60% of the time, as it is regulated by the room thermostat.

# Construction features of CRYSTALL FS

## Crystall FS

The Crystall FS electronic filtering system consists of two parts: the first is a **plate type electronic active filter** and is fitted in the suction section of the fan convector, while the second is an **electronic control and regulation board**. All electrical connections are made during production. The installation of the FuturaSabiana fan convector incorporating the Crystall electronic filter is therefore similar to that of a normal fan convector; the only difference is the installation height, for which the filter dimensions must taken into account.

Crystall FS may be installed on the **entire range and on all versions of the FuturaSabiana fan convector**.

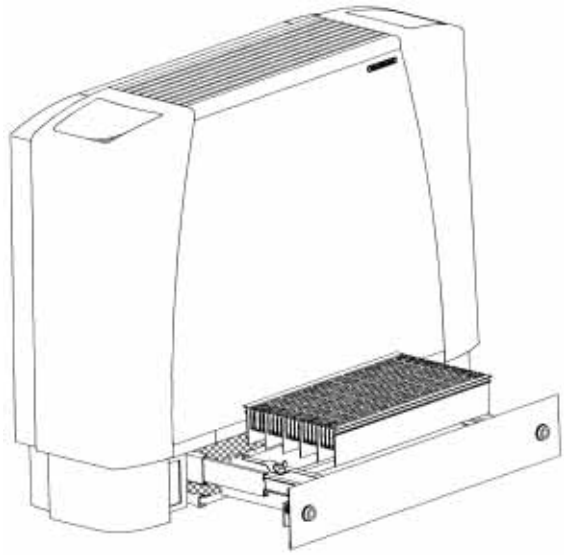

## Active plate type electronic filter

The filtering element consists of two sections: the first consists of electrodes and insulating elements, forming a self-supporting ionising frame, while the second consists of special reliable heavy duty aluminium extruded profiles (collector). The two sections are installed in an extractable drawer mounted on lateral telescopic guides to make the extraction and maintenance of the filter easier. The extraction of the drawer actuates a safety microswitch that cuts off the voltage supply to the electrodes.
A LED indicates the correct operation of the filter and any need to clean it (the LED flashes on and off). The collector can be cleaned by washing with water and ordinary detergents or steam jets (please consult the maintenance manual for further details).

## Electronics board

Controls and regulates all functions of the electronic filter. It is appropriately protected against any operating defects of the electronic filter. It supplies a constant voltage to the electrodes when the mains supply voltage varies (± 15%). The supply transformer is constructed with its primary and secondary coils physically separated and wound onto separate cores.
The energy consumption depends on the size of the fan convector on which the filter is mounted, with a maximum value of about 0.02 kW.

**The technical features of the various components of the fan convector**, such as the casing, the internal load-bearing structure, the mechanical filter, the ventilating unit and accessories are described in this catalogue respectively in the parts referring to the **FSC range** (centrifugal fan), the **FST range** (tangential fan) and the **FSR range** (tangential fan for homes). The control and regulation controls are described instead on page 82 and the following pages.

## Dimensions and Weight

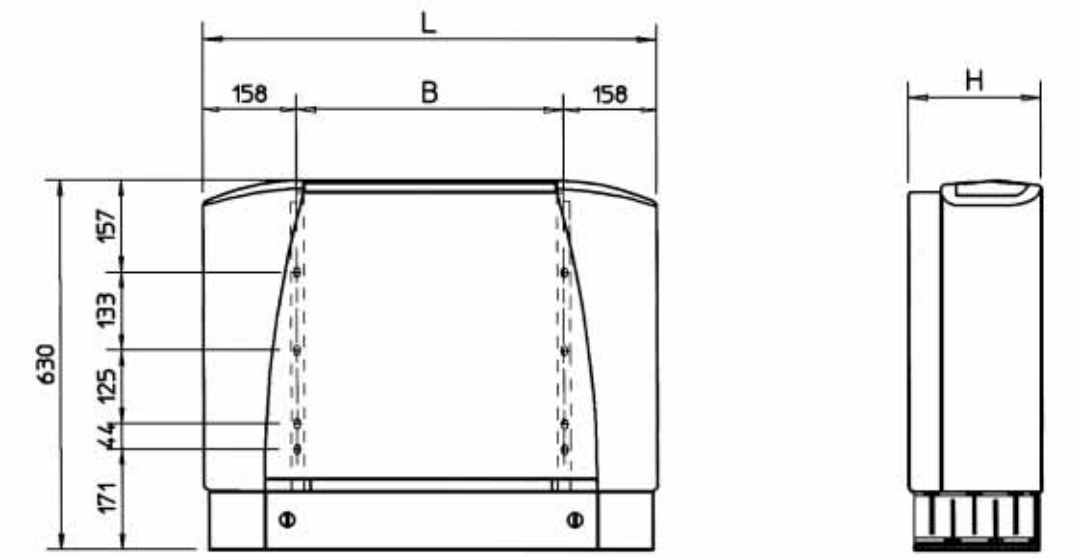


| VERSION | MV - MO | | | | | | | | | | | | | | MV | | | |
|---|---|---|---|---|---|---|---|---|---|---|---|---|---|---|---|---|---|---|
| RANGE | FSC FST | FSC FST | FSC FST | FSC FST | FSC FST | FSC FST | FSC FST | FSC FST | FSC FST | FSC FST | FSC | FSC | FSC | FSC | FSR | FSR | FSR | FSR |
| MOD. | 13 | 14 | 23 | 24 | 33 | 34 | 43 | 44 | 53 | 54 | 63 | 64 | 73 | 74 | 1 | 2 | 3 | 4 |
| Kg | 19 | 21 | 25 | 28 | 29 | 32 | 30 | 33 | 36 | 40 | 46 | 52 | 47 | 53 | 15 | 17 | 23 | 27 |
| B | 454 | | 669 | | 884 | | 884 | | 1099 | | 1099 | | 1099 | | 354 | 454 | 669 | 884 |
| L | 770 | | 985 | | 1200 | | 1200 | | 1415 | | 1415 | | 1415 | | 670 | 770 | 985 | 1200 |
| H | 225 | | 225 | | 225 | | 225 | | 225 | | 255 | | 255 | | 183 | | | |

## Feet

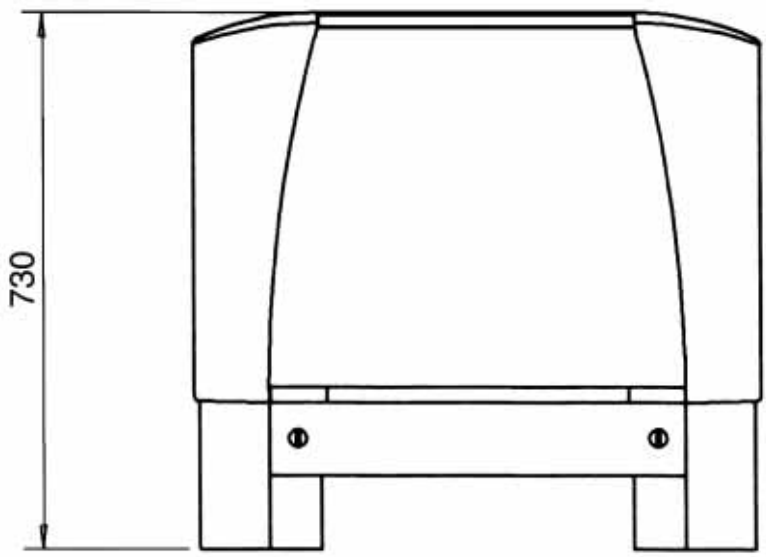

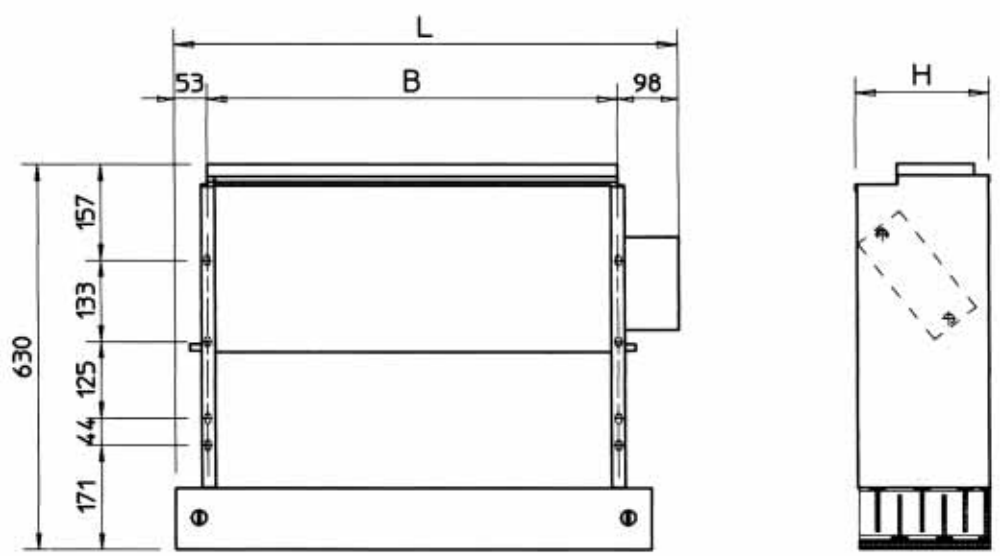


| MODEL | IV - IO | | | | | | | | | | | | | |
|---|---|---|---|---|---|---|---|---|---|---|---|---|---|---|
| VERSION | FSC FST | FSC FST | FSC FST | FSC FST | FSC FST | FSC FST | FSC FST | FSC FST | FSC FST | FSC FST | FSC | FSC | FSC | FSC |
| SIZE | 13 | 14 | 23 | 24 | 33 | 34 | 43 | 44 | 53 | 54 | 63 | 64 | 73 | 74 |
| Kg | 18 | 20 | 24 | 27 | 28 | 31 | 29 | 32 | 35 | 39 | 45 | 51 | 46 | 52 |
| B | 454 | | 669 | | 884 | | 884 | | 1099 | | 1099 | | 1099 | |
| L | 605 | | 820 | | 1035 | | 1035 | | 1250 | | 1250 | | 1250 | |
| H | 218 | | 218 | | 218 | | 218 | | 218 | | 248 | | 248 | |

| Identification | Code |
|---|---|
| MV - 3V - IAQ | 9063000 |

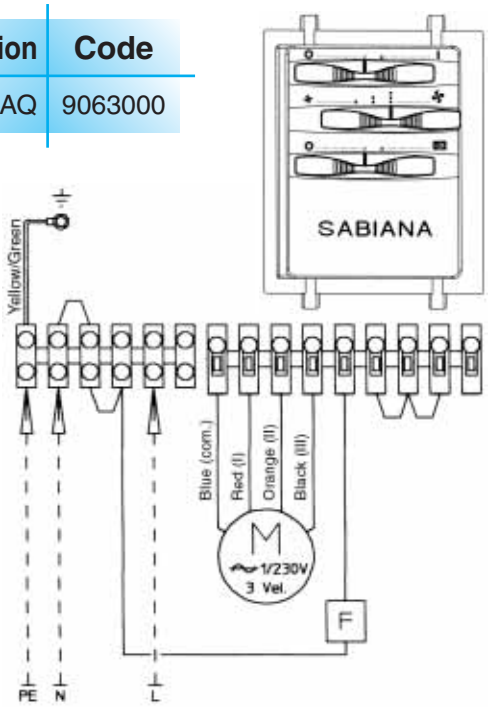


- ON-OFF switch and 3 speed switch.
- Electronic filter ON-OFF switch.

| Identification | Code |
|---|---|
| TMV - M - IAQ | 9063001 |

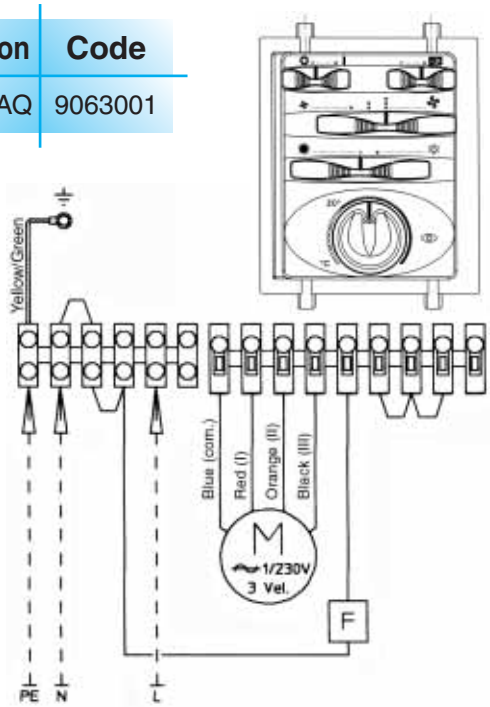


- ON-OFF switch and 3 speed switch.
- Summer/Winter switch.
- Electronic room thermostat for fan control (ON-OFF).
- Electronic filter ON-OFF switch.

| Identification | Code |
|---|---|
| TMV - T - IAQ | 9063002 |

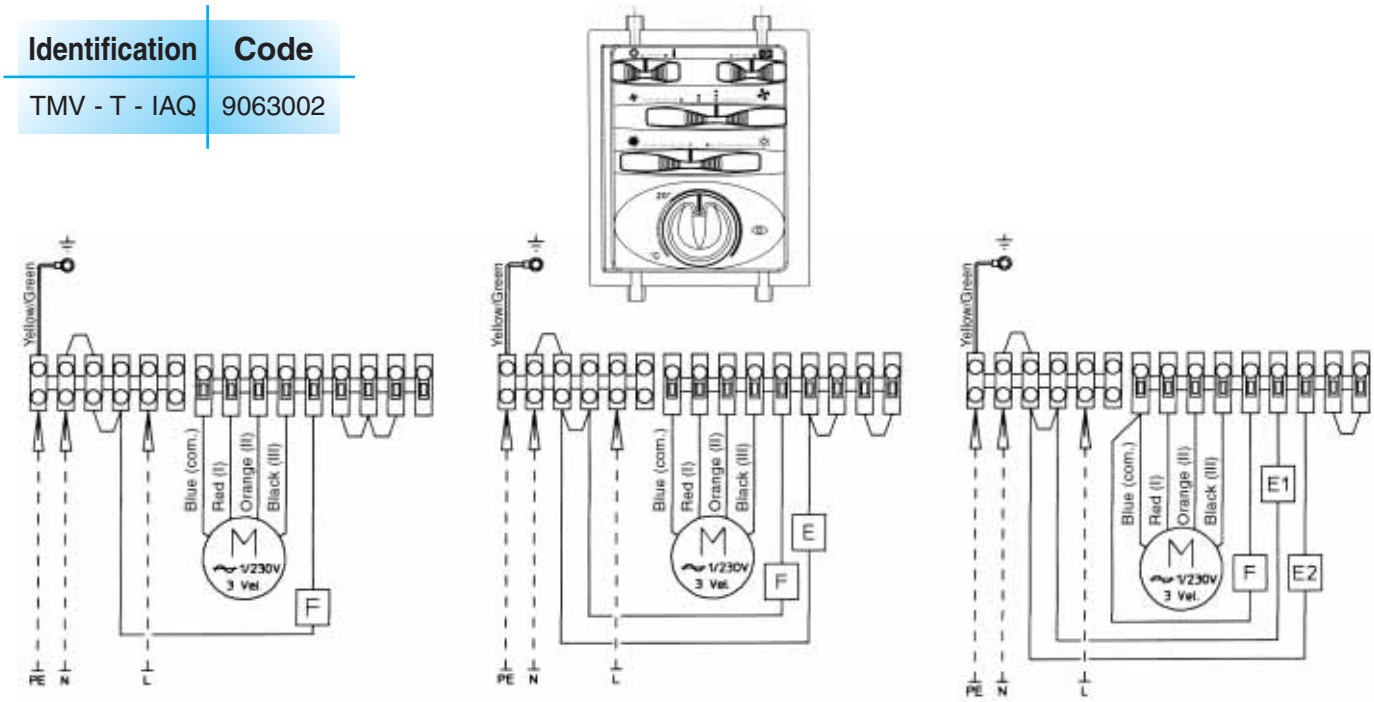


- ON-OFF switch.
- 3 speed switch.
- Summer/Winter switch.
- Electronic room thermostat for fan or valves control (ON-OFF).
- It allows to control the low temperature cut-out thermostat (TME).
- Electronic filter ON-OFF switch.
- It allows to control the chilled water valve (ON-OFF) and the heating electric resistance (BEL) only in case that the coil is not feeded with hot water in winter.

M = Fan
E = Water valve
E1 = Warm water valve
E2 = Chilled water valve
F = Electronic filter board (or electric resistance)

| Identification | Code |
|---|---|
| TMV - C - IAQ | 9063003 |

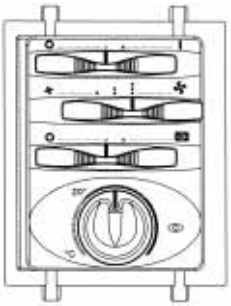

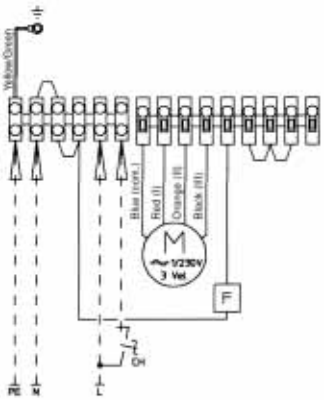


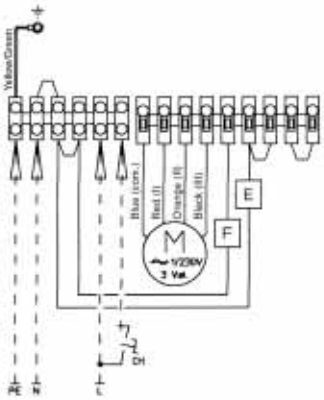


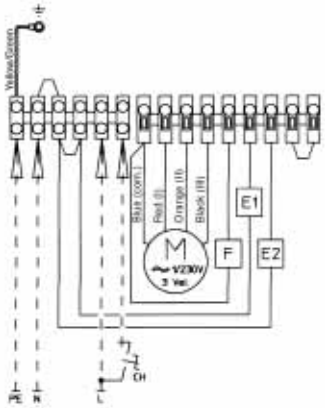


M = Fan
E = Water valve
E1 = Warm water valve
E2 = Chilled water valve

CH = Remote Summer/Winter switch
F = Electronic filter board (or electric resistance)

IN1 = SET Point reduction (-3°C winter, +3°C Summer)
IN2 = Remote Summer/Winter switch

Same control as the TMV-T-IAQ, but the Summer/Winter switch is centralized and remote, or an automatic change-over is fitted on the water pipe (for 2-tube installations only).

| Identification | Code |
|---|---|
| TMV - AU - IAQ | 9063004 |

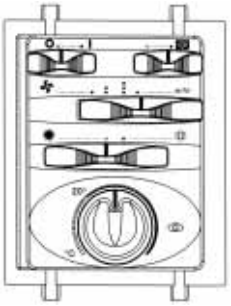

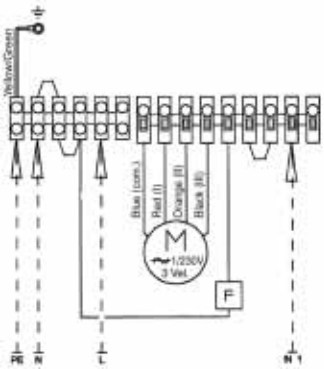


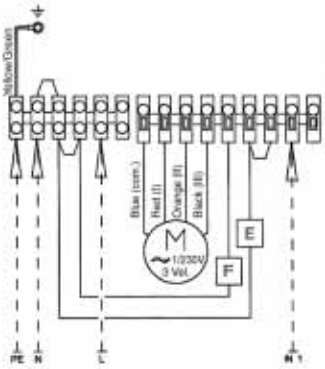


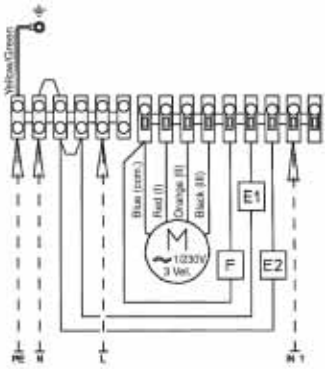


- Manual or automatic speed switch: on Auto Mode there is the automatic speed selection in accordance to the difference between room temperature and setpoint. When the setpoint is reached the fan go on OFF.
- Summer/Winter switch.
- Interruttore accensione filtro
- Electronic room thermostat for valve(s) control (ON-OFF).
- It allows to control the low temperature cut-out (TME).
- It allows to control the chilled water valve (ON-OFF) and the heating electric resistance (BEL) only in case that the coil is not feeded with hot water in winter.

**N.B.:** with 4 pipe installations and continuous chilled and hot water supply, it allows the automatic summer/winter change-over in accordance to the room temperature (-1,6°C = Winter, +1,6°C = Summer, Neutral Zone 3,2°C).

| Identification | Code |
|---|---|
| TMV - AU - C - IAQ | 9063005 |

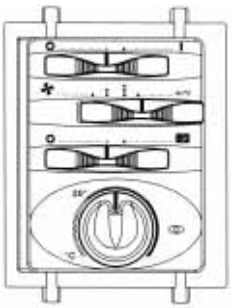

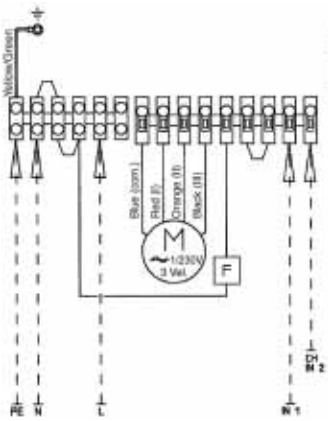


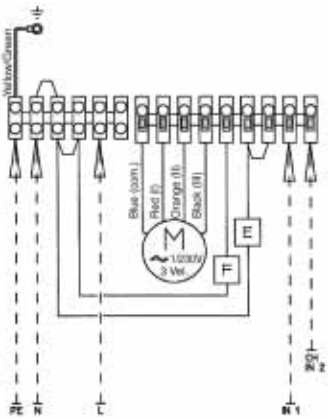


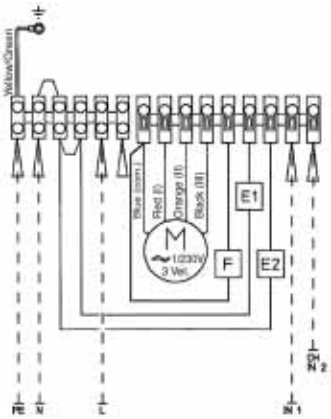


Same control as the TMV-AU-IAQ, but the Summer/Winter switch is centralized and remote, or an automatic change-over is fitted on the water pipe (for 2-tube installations only).

| Identification | Code |
|---|---|
| MO - 3V - IAQ | 9063020 |

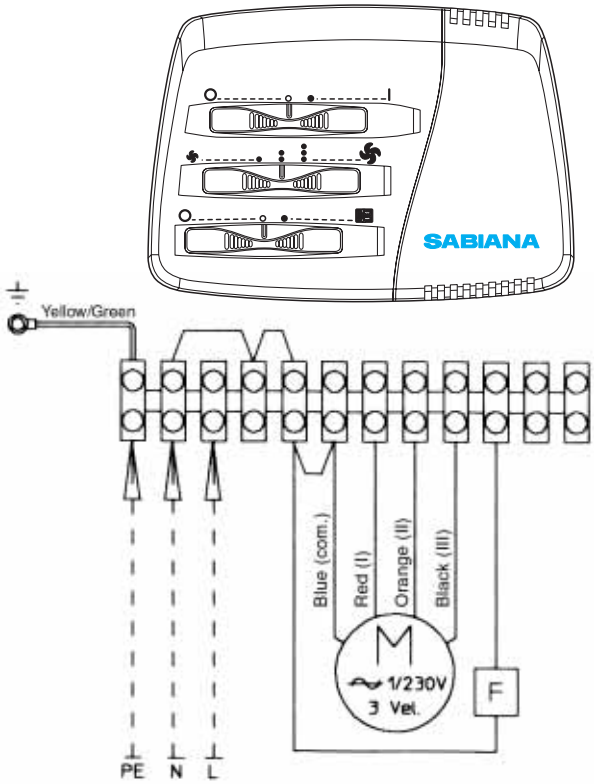


M = Fan
E = Water valve
E1 = Warm water valve
E2 = Chilled water valve
F = Electronic filter board
(or electric resistance)

- ON-OFF switch and 3 speed switch.
- Electronic filter
  or electric resistance ON-OFF switch.
- Without thermostatic control.

| Identification | Code |
|---|---|
| TMO - T - IAQ | 9063021 |

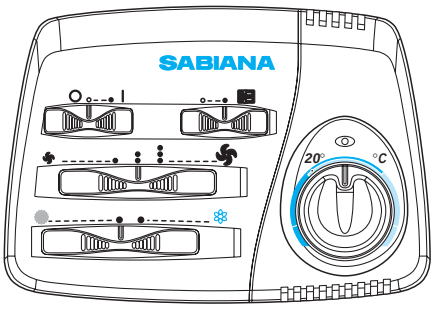


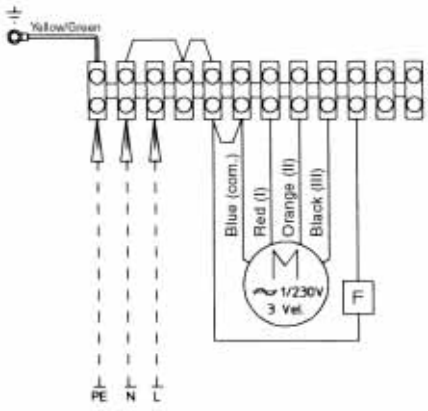


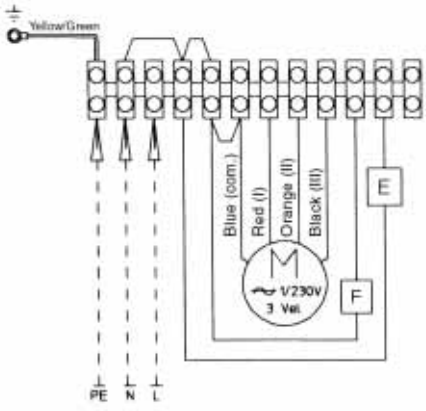


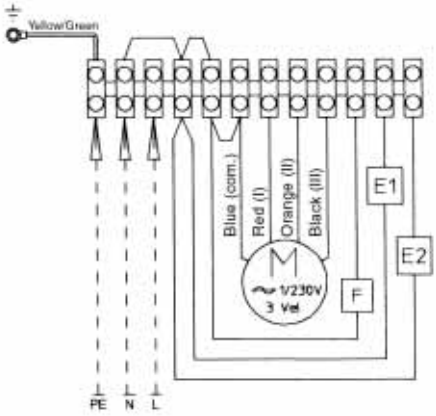


M = Fan
E = Water valve
E1 = Warm water valve
E2 = Chilled water valve
F = Electronic filter board
(or electric resistance)

- ON-OFF switch.
- 3 speed switch.
- Summer/Winter switch.
- Electronic filter or electric resistance ON-OFF switch.
- Electronic room thermostat for fan or valves control (ON-OFF).
- It allows to control the low temperature cut-out thermostat (TME).
- It allows to control the chilled water valve (ON-OFF) and the heating electric resistance (BEL) only in case that the coil is not feeded with hot water in winter.
- It allows to control the summer or winter cycle with centralized and remote switch, or an automatic change-over fitted on the water pipe (for 2-tube installations only).

| Identification | Code |
|---|---|
| TMO - T - AU - IAQ | 9063023 |

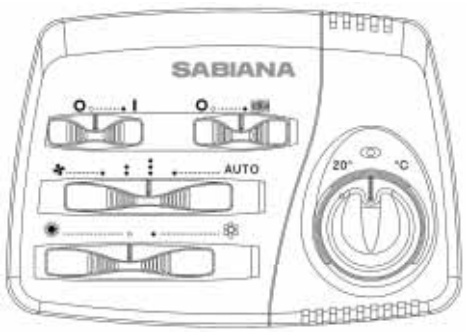


M = Fan
E = Water valve
E1 = Warm water valve
E2 = Chilled water valve
CH = Remote Summer/Winter switch
F = Electronic filter board (or electric resistance)

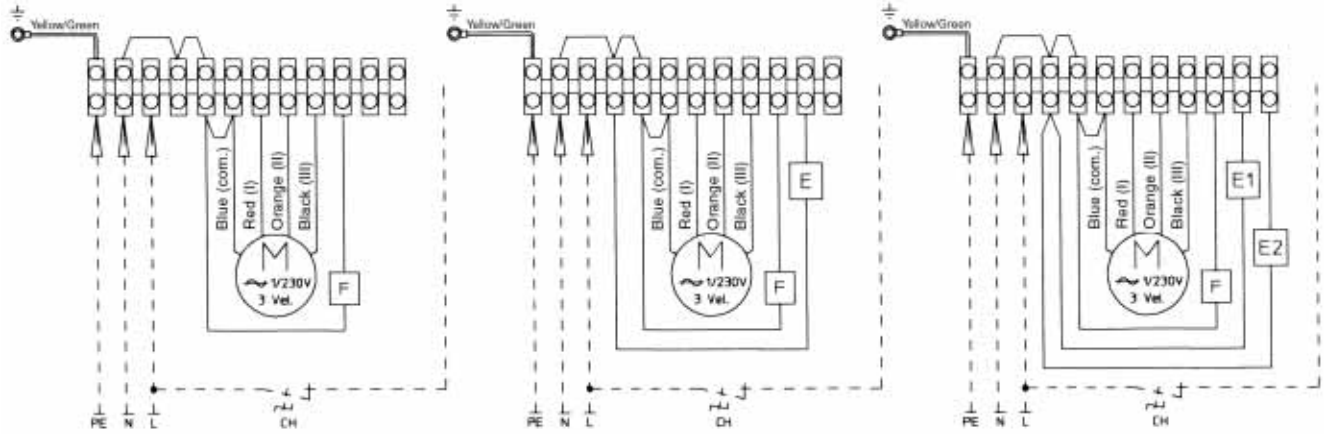


Same characteristic as TMO-T-IAQ, adding:
- Manual or automatic speed switch.
- Manual or centralized Summer/Winter switch with dead zone.
- Electronic filter or electric resistance ON-OFF switch.
- Electronic thermostat for fan control (ON-OFF).
- Electronic thermostat for valve(s) control (ON-OFF).
- Simultaneus thermostatic control on the valves and fan.

**N.B.:** with 4 pipe installations and continuous chilled and hot water supply, it allows the automatic summer/winter change-over in accordance to the room temperature (-1°C = Winter, +1°C = Summer, Neutral Zone 2°C).

| Identification | Code |
|---|---|
| TMO - DI | 9060163 |

To be installed on the wall
or in the electric switch box.


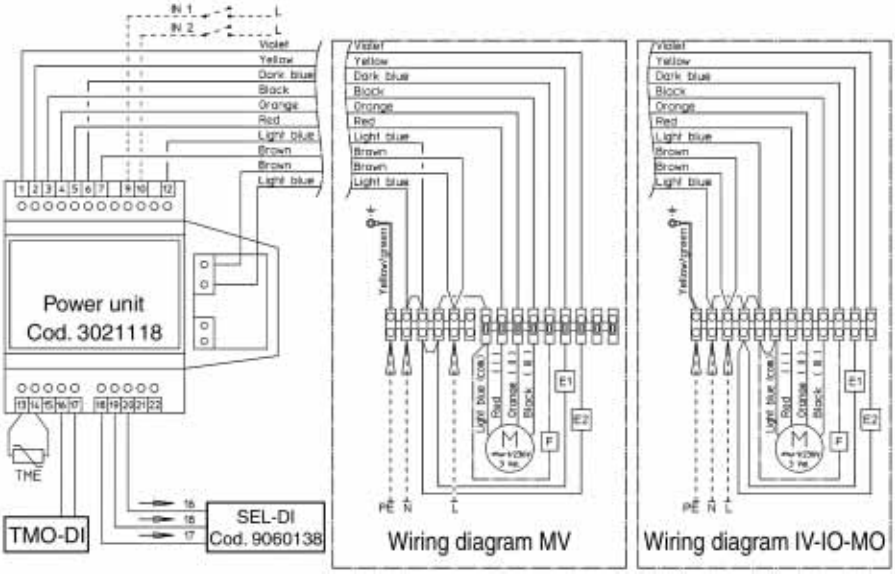


M = Fan
E = Water valve
E1 = Warm water valve
E2 = Chilled water valve
IN1 = Remote Summer/Winter switch
IN2 = SET Point reduction

- Manual or automatic speed switch.
- Manual or centralized Summer/Winter switch.
- Electronic thermostat for fan control (ON-OFF).
- Electronic thermostat for valve(s) control (ON-OFF).
- It allows to control the low temperature cut-out thermostat (TME).
- It allows to control the chilled water valve (ON-OFF) and the heating electric resistance (BEL) only in case that the coil is not feeded with warm water in winter.
- It allows to control the fan and the heating electric resistance.
- It allows to control up to 10 units with SEL-DI speed switch.

**N.B.:** with 4 pipe installations and continuous chilled and hot water supply, it allows the automatic summer/winter change-over in accordance to the room temperature (-1,6°C = Winter, +1,6°C = Summer, Neutral Zone 3,2°C).

| Identification | Code |
|---|---|
| SEL-DI | 9060138 |

**Speed switch (slave)**

It allows to control
up to 10 units
with only one TMO-DI
centralized thermostat.

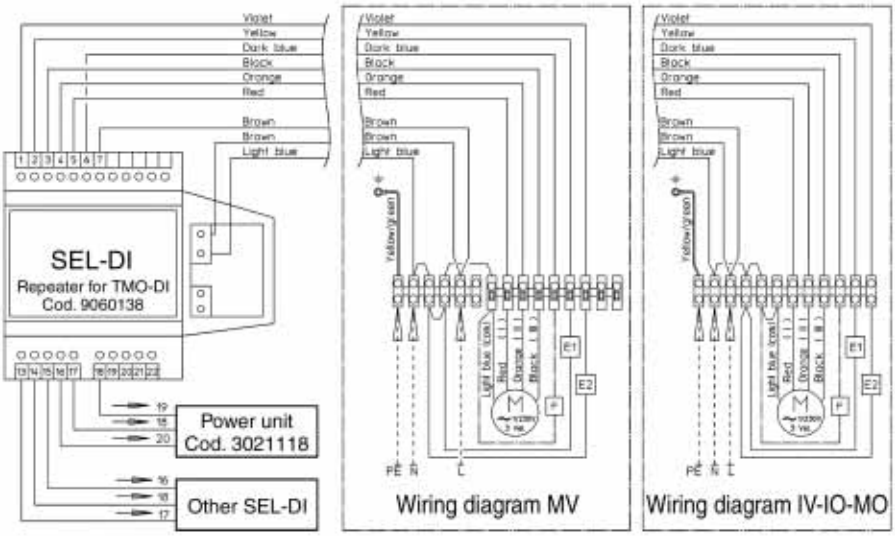

ICIM
www.icim.it

CISQ is a member of
IQNet
THE INTERNATIONAL CERTIFICATION NETWORK
www.iqnet-certification.com

*IQNet, the association of the world's first class certification bodies, is the largest provider of management System Certification in the world. IQNet is composed of more than 30 bodies and counts over 150 subsidiaries all over the globe.*

CERTIFICATO n.
*CERTIFICATE No.* 0545/2

SI CERTIFICA CHE IL SISTEMA DI GESTIONE PER LA QUALITA' DI
*WE HEREBY CERTIFY THAT THE QUALITY MANAGEMENT SYSTEM OPERATED BY*

# SABIANA S.p.A.

UNITA' OPERATIVE
*OPERATIVE UNITS*

Via Piave, 53 - 20011 Corbetta (MI)
Italia

E' CONFORME ALLA NORMA
*IS IN COMPLIANCE WITH THE STANDARD*

## UNI EN ISO 9001:2000

PER LE SEGUENTI ATTIVITA'
*FOR THE FOLLOWING ACTIVITIES*

EA: 18

Progettazione, produzione e assistenza di apparecchiature per il riscaldamento e il condizionamento dell'aria (aerotermi, termostrisce radianti, ventilconvettori e unità trattamento aria) e canne fumarie.

*Design, production and service of heating and air conditioning equipment (unit heaters, radiant panels, fan coil units and air handling units) and chimneys.*

Il presente documento annulla e sostituisce il certificato di pari numero emesso in data 10/06/2002.

Riferirsi al Manuale della Qualità per l'applicabilità dei requisiti della Norma ISO 9001:2000.
*Refer to Quality Manual for details of application to ISO 9001:2000 requirements.*

Il presente certificato è soggetto al rispetto del regolamento per la certificazione dei sistemi di gestione per la qualità delle aziende.
*The use and validity of this certificate shall satisfy the requirements of the rules for the certification of company quality management systems.*

| Data emissione<br>*First issue* | Emissione corrente<br>*Current issue* | Data di scadenza<br>*Expiring date* |
|---|---|---|
| 10/06/1996 | 10/04/2003 | 09/04/2006 |

**ICIM S.p.A.** - PIAZZA DIAZ, 2 - 20123 MILANO

CISQ è la Federazione Italiana di Organismi di Certiificazione dei sistemi di gestione aziendale

*CISQ is the Italian Federation of management system Certification Bodies*

SINCERT
Registraz. n°004A

FEDERAZIONE CISQ
www.cisq.com

**Air Conditioning**

Futura Fan Coil Units

FU - EX - 01/06
Cod. A4600100 B/01/06

SABIANA
ENVIRONMENTAL COMFORT

**Sabiana s.p.a.** • via Piave, 53 • 20011 Corbetta • Milano • Italy • phone +39.02.97203.1 r.a. / +39.02.97270429 / +39.02.97270576
fax +39.02.9777282 / +39.02.9772820 • www.sabiana.it • info@sabiana.it