HANSGROHE

Brausearm 140 mm DN15
27411XXX

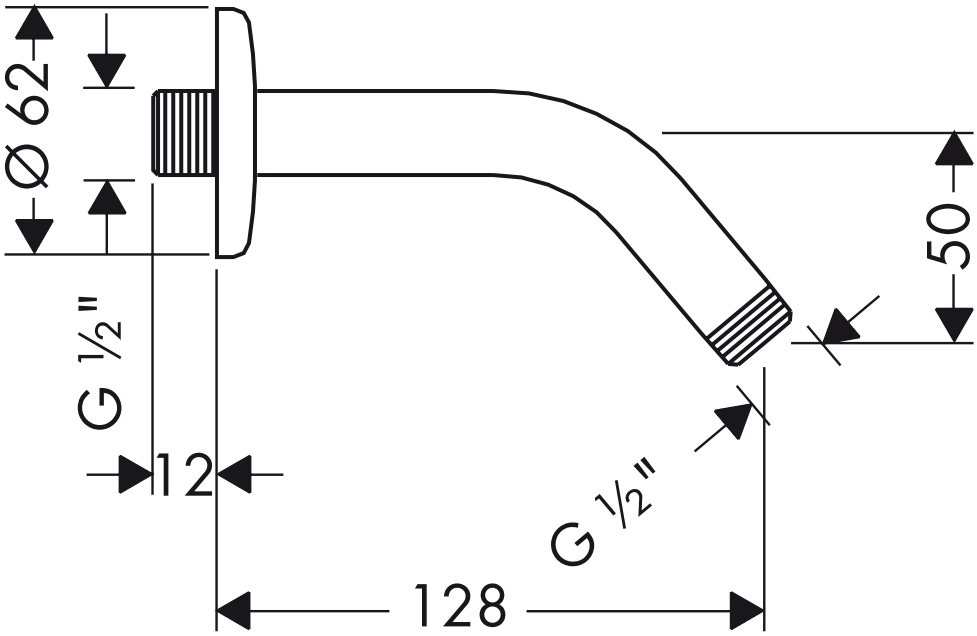

hansgrohe

For latest prices and delivery to your door visit MyTub Ltd - www.mytub.co.uk - info@mytub.co.uk 0844 556 1818