THE QUEEN'S AWARDS
FOR ENTERPRISE
2009

charnwood

SLX45
MULTI-FUEL

Operating & Installation Instructions

SLX*45*
MULTI-FUEL

CONTENTS

OPERATING INSTRUCTIONS

INSTALLATION INSTRUCTIONS

Ref. SLX45 09.00

GENERAL POINTS

Before lighting the fire check with the installer that the work and checks described in the installation instructions have been carried out correctly and that the chimney has been swept, is sound, and free from any obstructions. WARNING There must not be an extractor fan fitted in the same room as this appliance as this can cause the appliance to emit smoke and fumes into the room. If the appliance is fitted in place of an open fire then the chimney should be swept one month after installation to clear any soot falls which may have occurred due to the difference in combustion between the appliance and the open fire. When using the fire in situations where children or infirm people are present please use a fire guard to prevent accidents. The fire guard should be manufactured in accordance with BS 6539.

FUELS

The following smokeless fuels are all suitable for use on thiappliance:

Ancit (Phurnacite Plus),

Anthracite Large Nuts,

Centurion, Cosycoke,

Extracite,

Maxibrite,

Phurnacite,

Welsh Dry Steam Coal (Large Nuts).

The above fuels are all suitable for use in smoke control areas. In other areas the following fuels may also be burnt:

Coal

Housecoal doubles, trebles or cobbles may all be burnt. Do not use singles, small nuts, or coal dust. It is important that large size coal is used(i.e. larger than 2" or 50mm in size). The coal should be dry.

When burning bituminous coal a little extra care is needed. Please take note of the section ‘‘Special Points For Burning Coal’’.

Wood

Only dry well seasoned wood should be burnt on this appliance as burning wet unseasoned wood will give rise to heavy tar deposits. For the same reason hard wood is better than soft wood. Burning wet unseasoned wood will also result in considerably reduced outputs. The wood should be cut and split and then left to season in a well ventilated dry place for at least one year but preferably two years before use.

Peat

Ensure that the peat is well dried before use. Burning wet peat will give rise to heavy tar deposits and reduced outputs.

PETROLEUM COKE IS NOT SUITABLE FOR USE ON THIS APPLIANCE, ITS USE WILL INVALIDATE THE GUARANTEE

At first you may find it helpful to try several fuels to find the most suitable. If you are unable to obtain the fuel you want, ask your supplier or an approved fuel distributor to suggest an alternative.

DOOR OPERATION

The doors are opened by raising the door handle as shown in Fig. 1. When the fire is alight, avoid touching the doors other than on the knobs as the metal will become hot. When closing the doors do not use excessive force.

LIGHTING

Place some paper and dry kindling wood or fire lighters on the grate and cover with a small amount of fuel. Turn the thermostat control knob to the maximum setting and light the paper or fire lighters. Close the doors and allow the fire to burn until the fuel is well ignited then load with more fuel and adjust the thermostat to the required level. On initial lighting, the fire may smoke and give off an odour as the

Fig. 1. Controls

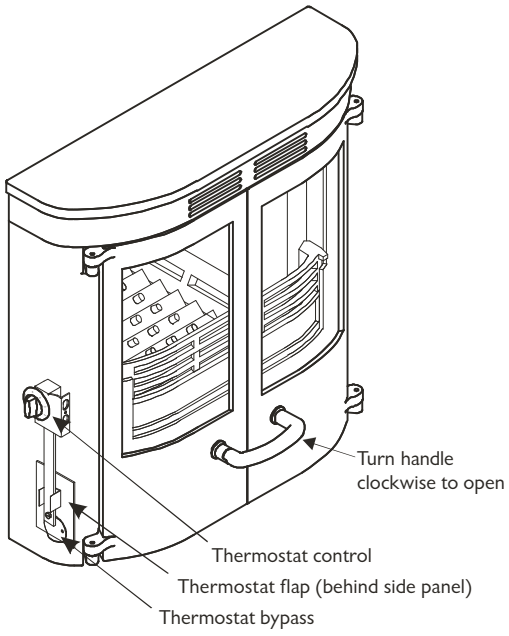

silicon paint with which the firebox is painted reacts to the heat. This is normal and will cease after a short time. In the meantime the room should be kept well ventilated. Before relighting the fire, riddle, remove any clinker from the firebed and empty the ashpan.

CONTROLLING THE FIRE

The rate of burning and hence the output is controlled by the control knob on the left hand side of the appliance, shown in Fig. 1. This is linked to a thermostat which controls the boiler temperature. The number at the top of the knob is the number at which it is set. Some experimentation may be necessary to obtain the desired heat output.

The thermostat also controls the airwash air which will keep the glass clear of deposits and also give a cleaner burn when using wood and coal. There is a thermostat bypass (shown in Fig. 3.) which will help to keep the glass clean when the fire is slumbering. This will need to be set to suit the chimney conditions.

For correct firing we recommend the use of a stove pipe thermometer which may be purchased from your supplier or from ourselves.

RUNNING THE FIRE WITH THE DOORS OPEN

The fire may be run with the doors open if desired although this will result in a reduction in efficiency and hence heat output, particularly to the boiler. The more reactive fuels, like Homefire, will burn better when the doors are open than fuels like Phurnacite and Ancit.

For safety reasons, if the fire is to be left unattended with the doors open then use a spark guard which complies with BS 3248.

SYSTEM CONTROLS

The heating system controls may consist of time switches, room thermostats, outdoor temperature thermostats and thermostatic radiator valves in virtually any combination. These will work in conjunction with the thermostat control on the appliance. The thermostat on the appliance will simply control the temperature of the water coming from the boiler and hence the temperature of the radiators and domestic hot water. The automatic controls (other than thermostatic radiator valves) will switch the pump (and hence the radiators) on and off. Your installer will be able to explain the controls fitted to your system and how to operate them.

ASH CLEARANCE

The ashpan should be emptied regularly before it becomes too full. The most convenient time to remove the ash is just before riddling the fire since the ash will then be at it's coolest. Use the ashpan/riddling tool provided to remove the ashpan, the fold up carrying handle should be held with a heat proof glove.

Never allow the ash to accumulate in the ashpan so that it comes in contact with the underside of the grate as this will seriously damage the grate bars. Ensure that the air inlet damper is not prevented from closing by spilled fuel or ash.

Care should be taken to ensure that ash is cool before

emptying it into plastic liners or bins.

To make ash removal easier there is a special **Charnwood ash carrier** available. This may be purchased from your supplier or, in case of difficulty, from ourselves.

RIDDLING

Riddling twice a day is usually sufficient.

The fire should be riddled with all doors shut. Place the tool on the knob and rotate between the horizontal and the 45° position several times as shown in Fig. 2.

Fig. 2. Grate Operation

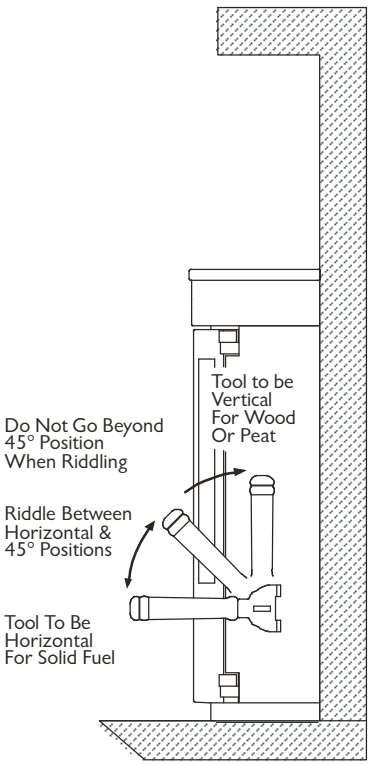

Caution: when riddling the grate using solid fuel do not go beyond the 45° position as this can cause the grate to jam.

If jamming does occur then the fire should be allowed to burn for approximately half an hour before riddling the grate again as described above.

Too much riddling can result In emptying unburnt fuel into the ashpan and should therefore be avoided. Clinker should regularly be removed from the firebed.

After riddling, the grate should be put back into the solid fuel position (the tool should be horizontal).

REFUELLING

Keep the firebox well filled (the fuel may be sloped up from the front firebars), but do not allow fuel to spill over the top of the front fire bars. Take care that fuel does not project over the front fire bars or damage to the glass may be caused when the doors are closed.

OVERNIGHT BURNING

Empty the ashpan, if necessary, and then riddle the fire. If the fire is very low then it may be necessary to add a little fuel and turn the thermostat control up to maximum for a brief period until the fire is burning brightly before filling with fuel.

If the central heating pump is off overnight then the thermostat may be left at the same setting for both day and night operation. If the central heating pump is on overnight then set the thermostat control to give the required level of heating.

Some experimentation may be necessary to find the setting most suitable for the particular fuel used and the draw on the chimney.

For overnight burning the fire doors must be closed.

To revive the fire, empty the ashpan if necessary, riddle, and turn the thermostat control knob to maximum. When the fire is burning well load on more fuel as necessary and turn the control knob to the desired setting.

THROAT PLATE AND FLUEWAY CLEANING

It is important that the throat plate and all the appliance flueways are kept clean. When burning smokeless fuels they should be cleaned at least monthly and more frequently if it is

stage for the flames to appear above the fire.

After a period of slumbering always turn the air control up to maximum and wait until flames appear above the fuel bed before opening the doors.

Burning coal will produce more soot deposits than other fuels, especially if the fire is run at low levels for long periods. It is therefore vital to clean the throat plate regularly, daily cleaning is recommended.

MAINTENANCE

Cleaning

The appliance is finished in vitreous enamel. To clean the surfaces simply wipe over with a dry cloth. Abrasive pads and scouring cleaners must not be used as these will damage the finish. Care should be taken not to knock the enamel with hard objects as it will chip.

Cleaning the Glass

The glass in the doors is a special ceramic glass which is able to withstand high temperatures. Before cleaning the glass open the doors and allow them to cool. Clean the glass using a damp cloth and then wiping over with a dry cloth. Any stubborn deposits on the glass may be removed with a proprietary stove glass cleaner or ceramic hob cleaner. Some deposits on the glass may be burnt off simply by running the fire at a fast rate for a few minutes. Do not use abrasive cleaners or pads as these can scratch the surface which will weaken the glass and cause premature failure. Aerosol spray cleaners should not be used near the appliance whilst it is under fire.

When not in use

If the fire is going to be out of use for a long period, (for instance in the summer,) then to prevent condensation, and hence corrosion, the thermostat should be left at the maximum setting and the main doors left ajar. It is also advisable to sweep the chimney and clean out the fire.

Spraying the inside of the doors and firebox with a light oil, such as WD40, will also help to keep all internal parts working well.

After long periods where the fire has been out of use, the chimney and appliance flueways should be cleaned before lighting.

Door Seals

For the fire to operate correctly it is important that the door seals are in good condition. Check that they do not become worn or frayed and replace them when necessary.

Servicing

It is recommended that the fire is serviced once a year to keep it in first class working order. After cleaning out the firebox thoroughly, check that all internal parts are in good working order, replacing any parts that are beginning to show signs of wear. Check that the doors seals are in good condition and that the doors seal correctly. Check the operation of the thermostat, both when cold and hot. A servicing guide, TIS 48. is available on request.

CHIMNEY SWEEPING

The chimney should be swept at least twice a year. In most installations it will be possible to sweep the chimney through the appliance.

First remove the front firebars and the throat plate. Then sweep the chimney ensuring that soot is removed from all horizontal surfaces after sweeping.

In situations where it is not possible to sweep through the appliance the installer will have provided alternative means, such as a soot door. After sweeping the chimney the appliance flue outlet and the flue pipe connecting the appliance to the chimney must be cleaned with a flue brush.

After clearing any soot from within the fire, replace the throat plate and the front firebars.

Different types of sweep's brushes are available to suit

Different types of sweep's brushes are available to suit different flueways. For standard brick chimneys a wire centre sweep's brush fitted with a guide wheel is recommended. For prefabricated insulated chimneys the manufacturers instructions with regard to sweeping should be consulted.

TROUBLE SHOOTING

Fire Will Not Burn

Check that:

a) the air inlet is not obstructed in any way,

b) chimneys and flueways are clear,

c) a suitable fuel is being used,

d) there is an adequate air supply into the room,

e) an extractor fan is not fitted in the same room as the fire.

Fire Blazing Out Of Control

Check that:

a) the doors are tightly closed,

b) the thermostat knob is turned down to the minimum setting,

c) the air inlet damper is closed (at the bottom left of the appliance, see Fig. 1.), and that it is not prevented from closing completely by a piece of ash,

d) a suitable fuel is being used,

e) the door seals are in good condition.

Over-Firing

If the fire is over-fired it will cause premature failure of the internal fire parts. Overfiring is occurring when any internal parts of the fire begin to glow red. To prevent over-firing ensure that:

a) the door seals are kept in good condition, and that the doors are sealing correctly,

b) the thermostat on the fire is working correctly,

d) the fire is not fitted onto a heating system which is too large.

Fume Emission

Warning Note: Properly installed and operated this appliance will not emit fumes. Occasional fume from de-ashing and re-fuelling may occur. Persistent fume emission is potentially dangerous and must not be tolerated. If fume emission does persist then the following immediate actions should be taken:

A) Open doors and windows to ventilate the room.

B) Let the fire out and safely dispose of fuel from the appliance.

C) Check for flue or chimney blockage, and clean if required.

D) Do not attempt to relight fire until cause of fume has been identified, if necessary seek professional advice.

The most common cause of fume emission is flueway or chimney blockage. For your own safety these must be kept clean.

Freezing

Do not light the fire if there is any possibility that any parts of the system may be frozen.

Chimney Fires

If the chimney is thoroughly and regularly swept, chimney fires should not occur. However, if a chimney fire does occur then turn the control knob to the minimum setting (see Fig. 1), and tightly close the doors of the appliance. This should cause the chimney fire to go out in which case the control should be kept at the minimum setting until the fire in the appliance has gone out. The chimney and flueways should then be cleaned. If the chimney fire does not go out when the above action is taken then the fire brigade should be called immediately.

After a chimney fire the chimney should be carefully examined for any damage. Expert advice should be sought if necessary.

Lack of Heat To Radiators / Hot Water

Check that:

a) the fire is burning properly - if not then carry out the checks under "Fire Will Not Burn".

b) the throat plate is fitted correctly, I.e. pushed back against the boiler, and that it Is not distorted.

c) the door seals are in good condition.

d) If the hot water goes cold when the pump is turned on, or if some radiators are hotter than others, then the system may need balancing, the pump may be pumping the water too quickly around the system, or the radiators may need bleeding. Please ask your installer to check these points.

Door Glass Blacks Up

Differences in chimney draughts mean that the best settings of the air controls will vary for different installations. A certain amount of experimentation may be required, however the following points should be noted and with a little care should enable the glass to be kept clean in most situations:

a) The airwash relies on a supply of heated air to keep the glass clean, therefore, when lighting the stove allow the firebed to become well established before turning the thermostat down. This may also be necessary when re-fuelling the stove.

b) When re-fuelling keep the fuel back a little from the front firebars, do not try to fit too much fuel into the firebox.

c) If the glass regularly blacks up when the fire is slumbering then the thermostat bypass should be opened slightly. After adjusting ensure that the fire will still close down sufficiently for overnight burning.

It is always more difficult to keep the glass clean when running the stove very slowly for long periods.

If blackening of the glass still occurs check that all flue connections are well sealed. It is also important that the chimney draw is sufficient and that it is not affected by down-draught. When the chimney is warm a draught reading of at least 2.5 mm (0.10 inches) water gauge should be obtained.

Fig. 3. Thermostat Bypass

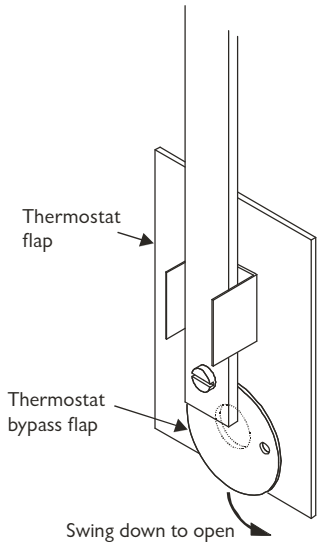

HEALTH AND SAFETY PRECAUTIONS

Please take care when installing the appliance that the requirements of the Health and Safety at Work Act 1974 are met.

Some types of fire cement are caustic and should not be allowed to come into contact with the skin. In case of contact wash with plenty of water.

If there is a possibility of disturbing any asbestos in the course of installation then please use appropriate protective equipment.

There must not be an extractor fan fitted in the same room as the appliance as this can cause the appliance to emit fumes into the room.

There must be an adequate air supply into the room in which the appliance is installed totalling at least 100 cm^2 (16 $in.^2$) to provide combustion air. This is particularly necessary if the room is double glazed.

Do not light the fire before the boiler has been connected to the system and filled with water, as this can cause serious damage to the boiler.

In addition to these instructions the requirements of BS:8303 and BS:6461 Pt 1&2; 1984 must be fulfilled. Local Authority Bylaws and Building Regulations regarding the installation of Solid Fuel burning appliances, flues and chimneys must also be observed.

PERFORMANCE

The rated output for the Charnwood SLX is 9.4 kW (32,000 btu/h) to water and 3.5 kW (11,900 btu/h) to the room.

These are the outputs obtained during the standard test burning smokeless fuel with the doors closed over a 4 hourly re-fuelling interval.

The heat output to the room is directly proportional to the heat output to water as shown in Fig. 4. This means that if the water heating load is less than the rated output then the room heating will be reduced by the same proportion. This must be borne in mind when calculating the heating requirements.

Fig. 4. Performance Chart

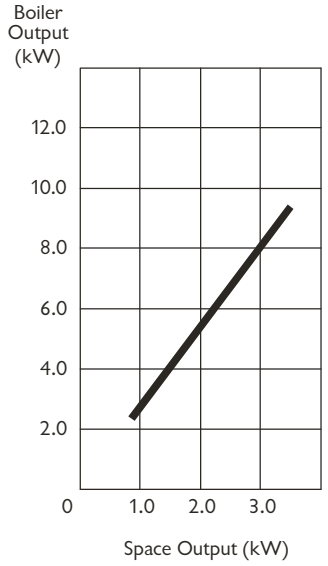

CHIMNEY

In order for the appliance to perform satisfactorily the chimney height must not be less than 4 metres measured vertically from the outlet of the fire to the top of the chimney. The chimney should preferably be 175 mm (7 inches) or 200mm (8 inches) internal diameter or square with sides of 175mm or 200mm internally and **MUST NOT BE LESS THAN 150mm (6 INCHES) INTERNAL DIAMETER OR 150 x 150mm INTERNAL SQUARE.**

If an existing chimney is to be used it must be swept and checked, it must be in good condition, free from cracks and blockages, and should not have an excessive cross sectional area (e.g. greater than 250mm x 250mm). If you find that the chimney is in poor condition then expert advice should be sought regarding the necessity of having the chimney lined.

If it is found necessary to line the chimney then a lining suitable for Solid Fuel must be used. If there is no existing chimney then a prefabricated block chimney or a twin walled

insulated stainless steel flue to BS:4543 can be used either internally or externally. These chimneys must be fitted in accordance with the manufacturers instructions and Building Regulations.

Single wall flue pipe is suitable for connecting the appliance to the chimney but is not suitable for using for the complete chimney.

If it is found that there is excessive draw in the chimney then a draught stabilizer should be fitted.

HEARTH

The appliance must be installed on a fireproof hearth and must be situated at least 300 mm (12 inches) from any combustible material. The positioning of the appliance and the size of the hearth are governed by building regulations for Class 1 appliances. These building regulations state that the hearth must extend in front of the appliance by at least 300 mm (12 inches) and to the sides by at least 150 mm (6 inches). If in doubt as to the positioning of the appliance expert advice should be sought either from the supplier or the local building inspector.

PREPARATION OF FIREPLACE

Before fitting the appliance into an existing fireplace remove the fireback and any loose in-fill material.

The surround and opening for the appliance must conform with Figs. 5. The flat area around the opening must be a minimum of 750 mm wide and 660 mm high. Ensure that the hearth and the base in the opening are flat, level, and at right angles to the surround.

Make two holes in the chimney breast, one in the front to give access for infilling and fixing the flue pipe, and one in the side to give access for the pipework.

CENTRAL HEATING SYSTEM

The central heating system must comply with BS:5449 part 1.

Fig. 5. Limiting Dimensions Of Surround And Opening

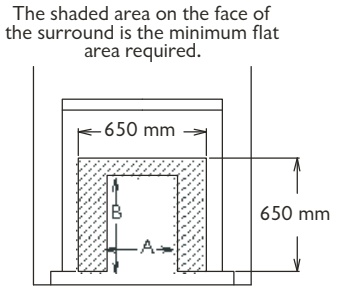

Dim. A:
Max. 470mm (18 1/2")
Min. 405mm (16")

Dim. B:
Max. 575mm (22 2/3")
Min. 555mm (21 3/4")

If the system is to be a combined heating and domestic hot water system then a double feed indirect hot water storage cylinder to BS:1566 part 1 should be used. In order to prevent the build up of scale and corrosion a suitableinhibitor should be used. The system must be correctly vented as shown in Figs. 6 and 7. The height differential between the header tank and the appliance must not exceed 15.2 metres (50 feet).

If all four boiler tappings are used then, if possible, diagonal pairs should be connected for domestic hot water and central heating. Where a common return is used an injector tee must be Incorporated into the system as shown in Fig. 8. This will ensure that a good domestic hot water supply is maintained when the central heating pump is operating.

The system must incorporate a gravity circuit which will normally heat the domestic hot water and an unvalved radiator with an output of at least 1 kW. When the appliance is not connected to a domestic hot water system the unvalved radiator(s) on the gravity circuit must have an output of at least 1.25 kW. This is to prevent boiling in case of pump failure. All pipework in the primary circuit must be 28 mm diameter and the gravity flow pipe must rise continuously from the boiler to the open vent. Two typical systems are shown in Figures 6. and 7.

If the appliance is used to heat a small central heating system then the heat output to the room from the fire will be reduced. Fig. 4. shows the ratio of space heating to water heating which can be expected.

Fitting a radiator in the same room as the fire is recommended as it will allow greater flexibility In the way that the system is operated as well as ensuring that there is sufficient heat.

SYSTEM CONTROLS

The circulating pump may be controlled by means of time switches, room thermostats or outdoor thermostats. Radiators may be either manually or thermostatically controlled. These controls will all work in conjunction with the thermostat on the appliance and the minimum return thermostat.

We recommend fitting a pipe thermostat onto the gravity return pipe and wiring it into the mains supply to the pump so that if the gravity return temperature drops below 45° C then the pump will cut out. This will help to prevent condensation forming on the boiler faces and will thereby increase the life of the boiler. It will also ensure that priority is given to the domestic hot water. These thermostats are available from ourselves if you are unable to obtain them locally.

FITTING THE FIRE

In some cases it may be necessary to place the connecting flue pipe in the chimney before fitting the fire into the fireplace.

Apply fire cement to the rear face of the sealing flange on the appliance. Fit the appliance into the opening ensuring that it is central and that a good seal is made between the sealing flange and the face of the surround.

Fig. 6. Typical Central Heating & Hot Water System Using 4 Boiler Tappings

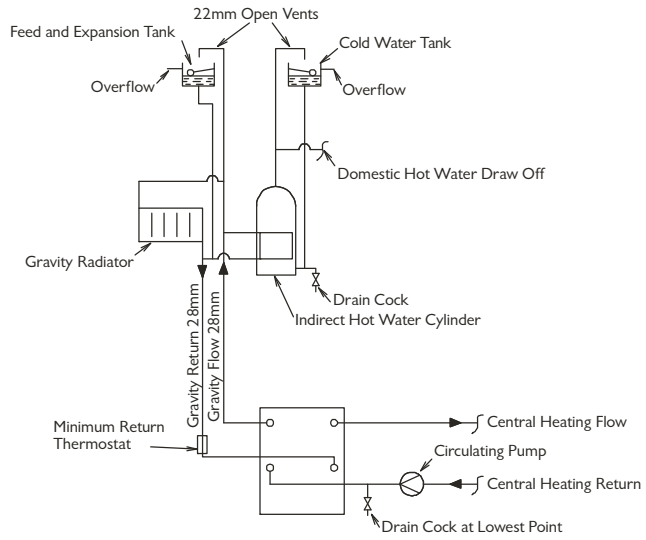

Fig. 7. Typical Central Heating & Hot Water System Using 3 Tappings

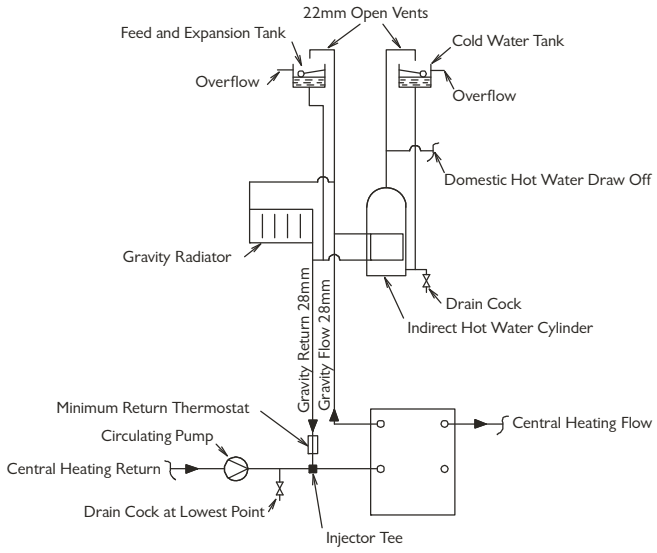

Fig. 8. Injector Tee

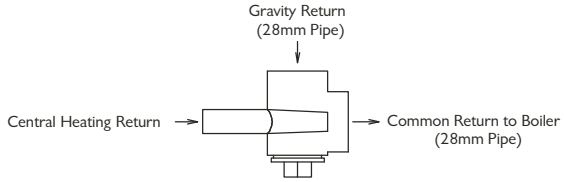

Remove any excess fire cement from around the sealing flange. The fire should be screwed to the hearth through the holes at the base of the sealing flange.

Connect the heating system to the boiler ensuring that the primary flow pipe rises from the appliance. Fill the system with water and check for leaks.

FLUE CONNECTION AND INFILLING

Make the flue connection with a short length of 150mm (6'') internal diameter flue pipe (cast iron to Bs41, 1.0 mm thick stainless steel, or 5.0mm thick mild steel).

The end of the flue pipe must line up with the centre-line of the chimney, and must also extend to the point where the chimney narrows to its final size. Any large voids must be filled and flaunched to the flue pipe to ensure that all soot deposits can be cleared when the chimney is swept. If necessary a flue offset is available. The offset may be used directly with stainless steel flue pipe or may be used with cast iron flue pipe in conjunction with a cast iron adaptor. If the flue pipe has to be set at an angle then cut the ends so that it sits correctly.

Ensure that the flue pipe is not obstructed or restricted in any way and that all joints are well sealed.

Before infilling cover the front of the appliance to protect it. Ensure that the flue pipe is central and then fill the space between the body of the appliance and the structural brickwork with vermiculite (e.g. Micafil or similar) concrete. Ensure that there are no air pockets. The recommended mix is six volumes of vermiculite granules to one volume of Portland cement thoroughly mixed together. Enough water should be added so that no more than one or two drops of water are released when a handful of the mixture is squeezed.

After filling with vermiculite flaunch the top of the flue connector pipe to the chimney with lime mortar.

Make good the holes in the front and side of the chimney breast making sure that they are completely airtight. A typical installation is shown in Fig. 9.

Fig. 9. Typical Installation

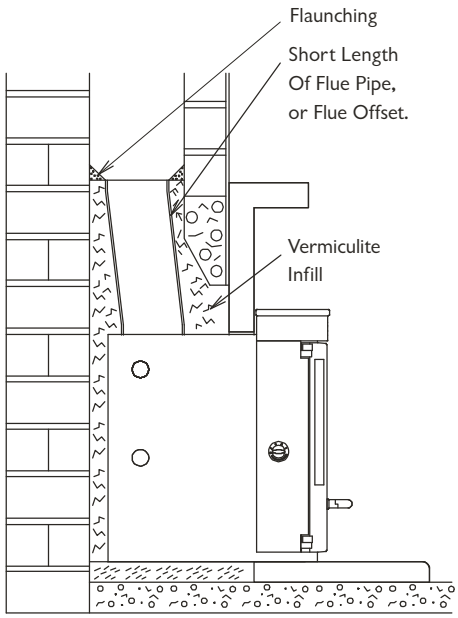

In most installations it will be possible to sweep the chimney through the appliance. If this is not possible then some alternative means (such as a soot door), must be provided.

The free inset method of installation may be used instead of infilling. Details are available on request.

THERMOSTAT

Before lighting the fire check the cold setting distance of the thermostat.

With the control knob at the maximum setting the flap should be 18 mm from the air inlet as shown in Fig. 10. To adjust the distance slacken the locking nut and adjust as necessary. When set correctly re-tighten the locking nut. Ensure that the flap opens and closes freely as the knob is turned.

ASSEMBLY

Fit the side panels and hood onto the appliance. Instructions for this are enclosed with the panel pack. Replace any internal parts previously removed.

Fig. 10. Thermostat Setting

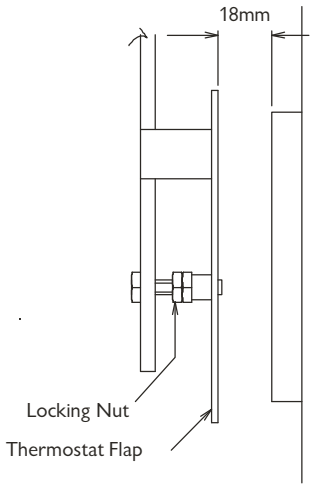

PRE LIGHTING CHECK

Before initial lighting check the following points:

1. The bottom grate bars must all be fitted and should move freely and easily when the riddling mechanism is operated.

2. The plates round the sides and back of the grate must be in position and sitting correctly.

3. The throat plate must be fitted in the roof of the appliance and should be pushed back so that it touches the knee of the boiler.

COMMISSIONING

On completion of the installation and after allowing a suitable period of time for the fire cement and mortar to dry out, the fire should be lit and checked to ensure that smoke and fumes are taken from the appliance up the chimney and emitted safely. Also check all joints and seals.

The central heating pump should be adjusted to give the correct water flow against the circuit resistance and the system should be correctly balanced.

On completion of the installation and commissioning please leave the operating instructions with the customer and advise on the use of the appliance and any controls on the system.

SLX45 DIMENSIONS (MM)

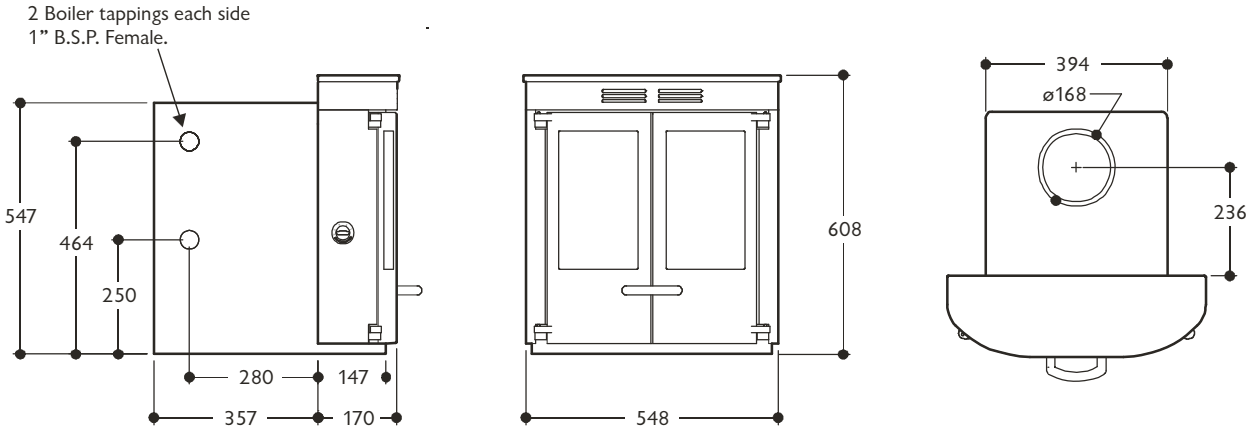

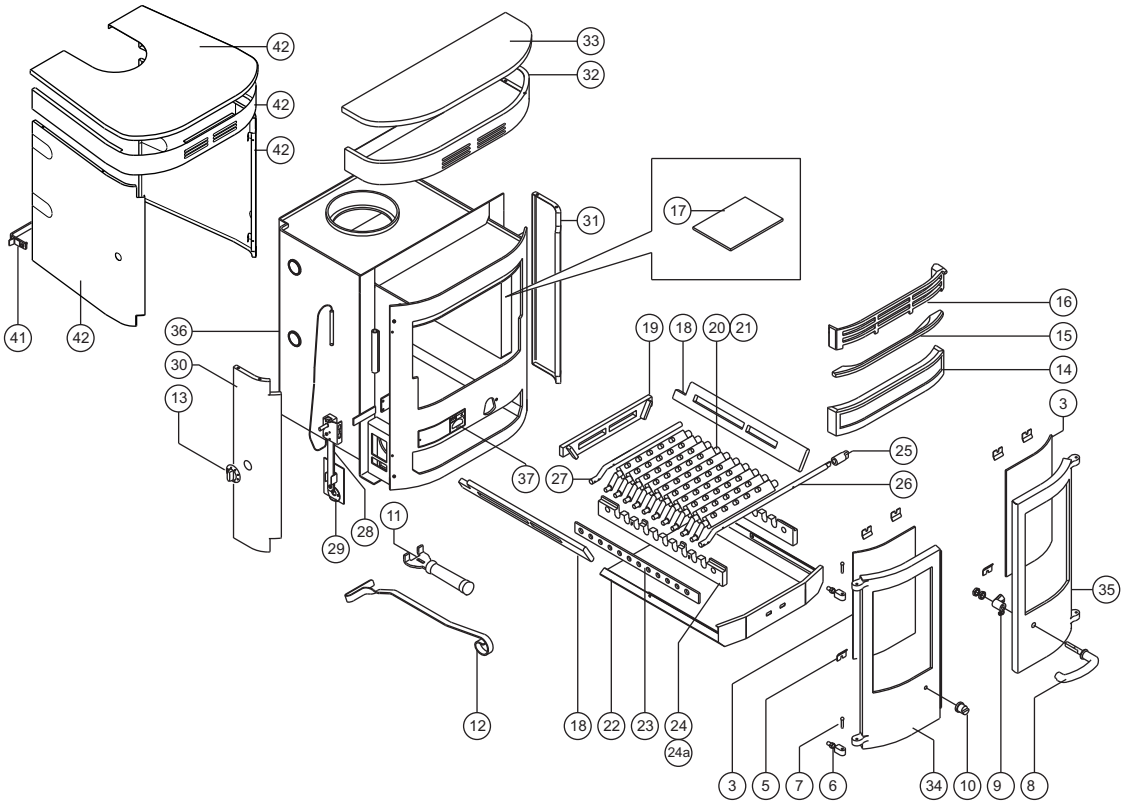

Item	Part	Description	Item	Part	Description
1*	008/KV35S	Door Seal Set Inc. Adhesive	22	004/KV17	Ashpan
2*	008/FW29	Door Seal Adhesive	23	012/KV33	Mover Bar
3	006/KV18	Glass Inc. Glass Channel	24	002/KV30	Carrier Bar
4*	008/RW44/S	Glass Channel - set of 8	24a	008/BW40	Carrier Bar Roll Pin (pair)
5	004/KV23	Glass Retainer	25	002/CG06	Riddler knob
6	008/TV27	Hinge Post	26	012/KV19	Riddler Rod
7	008/BW39/S	Hinge Pin Set (4 per set)	27	012/CG05	Idler Rod
8	008/KV16	R.H. Door Handle	28	008/FW48	Thermostat
9	002/KV14	Door Catch Cam	29	008/KV49	Thermostat Flap
10	008/KV13	L.H. Door Knob	30	005/KV04/##	L.H. Side Panel
11	010/RW21	Ashpan Tool	31	005/KV05/##	R.H. Side Panel
12	012/FW34	Scraper Tool	32	005/KV06/##	Lower Hood Panel
13	008/BW50	Thermostat Knob	33	005/KV09/##	Top Hood Panel
14	002/KV07	Front Firebar	34	003/TV01/##	L.H. Door
15	002/KV11	Front Firebar Back Plate	35	003/TV02/##	R.H. Door
16	002/KV08	Deepening Bar	36	009/SLX45/A	Replacement Firebox/Boiler Assy.
17	002/AV31	Throat Plate	37	012/KV12	Serial No. Label
18	002/FW15	Side Fire Plate	41**	010/KV29	Freestanding Panel Fixing Bracket
19	002/FW16	Back Fire Plate	42**	020/KV52/##	Freestanding Panel Pack
20	002/CG01	Bottom Grate Bar			
21	002/CG01S10	Set of Grate Bars (10)			

* These items are not shown on the drawing.
Please specify colour when ordering.
** These items are included in the Freestanding Panel Pack

To obtain spare parts please contact your local stockist giving Model, Part No. and Description. In case of difficulty contact the manufacturer at the address shown.
This drawing is for identification purposes only.

charnwood BISHOPS WAY, NEWPORT, ISLE OF WIGHT PO30 5WS, UNITED KINGDOM

T:+44 (0)1983 537799 • F:+44 (0)1983 537788 • SPARES@CHARNWOOD.COM • WWW.CHARNWOOD.COM

your premier dealer

REV. SLX45 09.00

charnwood BISHOPS WAY, NEWPORT, ISLE OF WIGHT PO30 5WS, UNITED KINGDOM

T:+44 (0)1983 537777 • F:+44 (0)1983 537788 • CHARNWOOD@AJWELLS.CO.UK • WWW.CHARNWOOD.COM

A Division of A.J.Wells & Sons Limited Registered in England No. 03809371