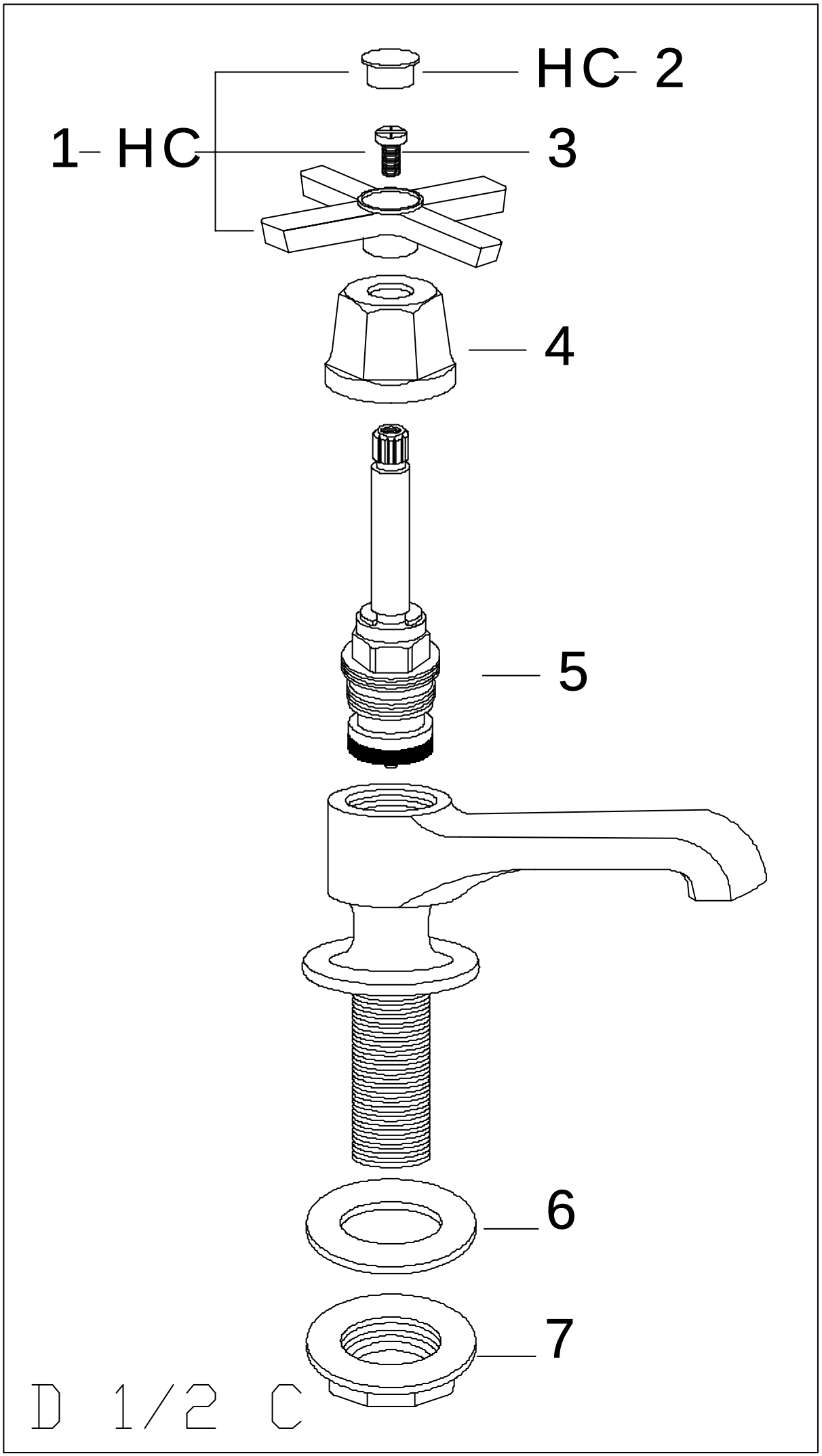

For latest prices and delivery to your door visit MyTub Ltd 0845 303 8383 www.mytub.co.uk