Damper actuator for operating air control dampers in ventilation and air-conditioning systems for building services installations

- **For air dampers up to approx. 0.4 m²**
- **Torque 2 Nm**
- **Nominal voltage AC/DC 24 V**
- **Control: Open-close or 3-point**
- **Degree of protection IP66**
- **Damper rotation: Form-fit 8 mm**

Type overview

Type	Direction of rotation
CM24G-F-L	counter-clockwise (ccw)
CM24G-F-R	clockwise (cw)

Technical data

Electrical data	Nominal voltage	AC 24 V, 50/60 Hz / DC 24 V
	Nominal voltage range	AC/DC 19.2 ... 28.8 V
	Power consumption In operation	0.5 W @ nominal torque
	At rest	0.2 W
	For wire sizing	1 VA
	Connection	Cable 1 m, 3 x 0.75 mm²
Functional data	Torque (nominal torque)	Min. 2 Nm @ nominal voltage
	Direction of rotation	See «Type overview»
	Manual override	Gear disengagement with magnet
	Angle of rotation Without limit	Endless
	With limit	Fixed 315°∢ or 0 ... 287.5°∢ with mechanical end stops, can be adjusted in 2.5°∢ increments
	Running time	75 s / 90°∢
	Sound power level	Max. 35 dB (A)
	Damper rotation	Form-fit 8 mm
	Position indicator	Mechanical, pluggable (with integrated magnet for gear disengagement)
Safety	Protection class	**III** Safety extra-low voltage / UL Class 2 Supply
	Degree of protection	IP66 NEMA2, UL Enclosure Type 2
	EMC	CE according to 2004/108/EC
	Certification	cULus according to UL 60730-1A and UL 60730-2-14 and CAN/CSA E60730-1:02 Certified to IEC/EN 60730-1 and IEC/EN 60730-2-14
	Mode of operation	Type 1 (EN 60730-1)
	Rated impulse voltage	0.8 kV (EN 60730-1)
	Control pollution degree	3 (EN 60730-1)
	Ambient temperature	–30 ... +50°C
	Non-operating temperature	–40 ... +80°C
	Ambient humidity	95% r.H., non-condensating (EN 60730-1)
	Maintenance	Maintenance-free
Dimensions / Weight	Dimensions	See «Dimensions» on page 2
	Weight	Approx. 185 g

Notes

- To guarantee IP66 protection, the device must be mounted on the rear of the damper housing without a gap.
- If the device is mounted on the front of the damper housing (i.e. turned 180°∢), it only has IP54 protection.

Safety notes

- **The actuator is not allowed to be used outside the specified field of application, especially in aircraft or any other form of air transport.**
- **Assembly must be carried out by trained personnel. Any legal regulations or regulations issued by authorities must be observed during assembly.**
- **The device may only be opened at the manufacturer's site. It does not contain any parts that can be replaced or repaired by the user.**
- **When calculating the required torque, the specifications supplied by the damper manufacturers (cross section, design, installation site), and the air flow conditions must be observed.**

For latest prices and delivery to your door visit MyTub Ltd - 0845 303 8383 - www.mytub.co.uk - info@mytub.co.uk

Safety notes

(Continue)

- **The device contains electrical and electronic components and is not allowed to be disposed of as household refuse. All locally valid regulations and requirements must be observed.**

Product features

Simple direct mounting
The hollow spindle of the actuator is mounted directly on the damper spindle (■ 8 mm) with a positive-fit connection. The actuator is then secured with the anti-rotation strap supplied, to prevent it from rotating.

Manual override
Manual override with magnet possible (the gear is disengaged as long as the magnet adheres to the symbol ⓜ. The magnet for gear disengagement is integrated in the position indicator.

Adjustable angle of rotation
Adjustable angle of rotation with mechanical end stops.

High functional reliability
The actuator is overload-proof, requires no limit switches and automatically stops when the end stop is reached.

Electrical installation

Wiring diagrams

Note
- Connect via safety isolation transformer.
- Other actuators can be connected in parallel. Please note the performance data.

Open-close control

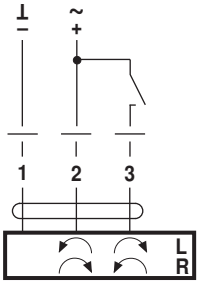

3-point control

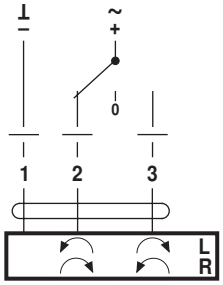

Dimensions [mm]

Dimensional drawings

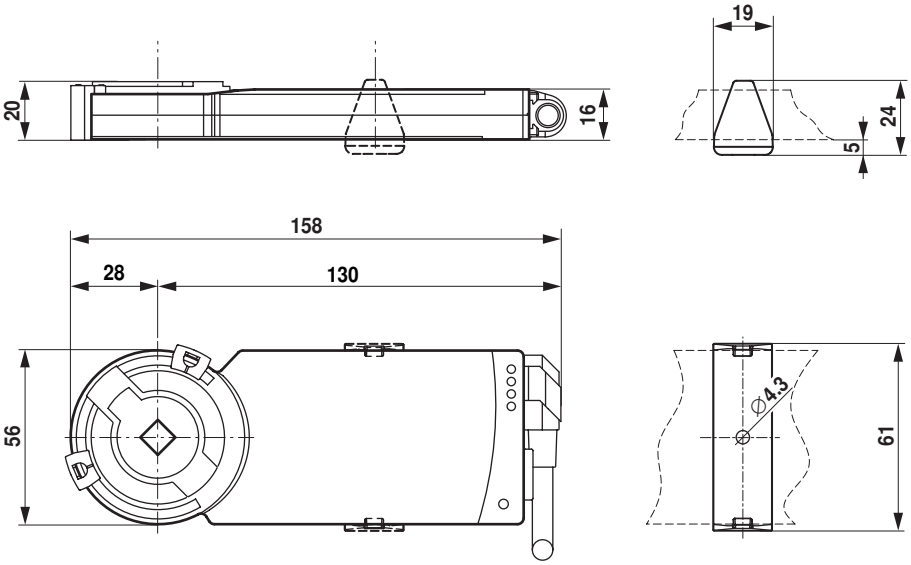

Damper spindle	Length	■
	≥25	8

For latest prices and delivery to your door visit MyTub Ltd - 0845 303 8383 - www.mytub.co.uk - info@mytub.co.uk

70907-00001.A

1

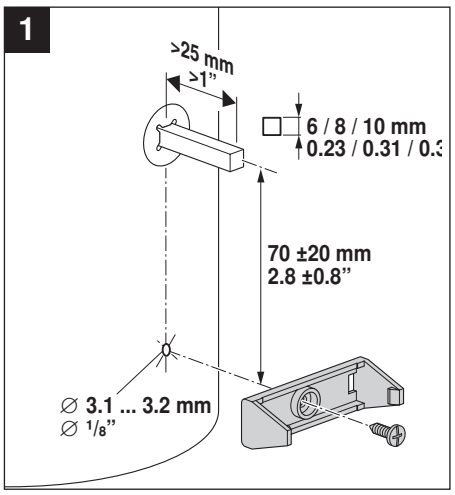

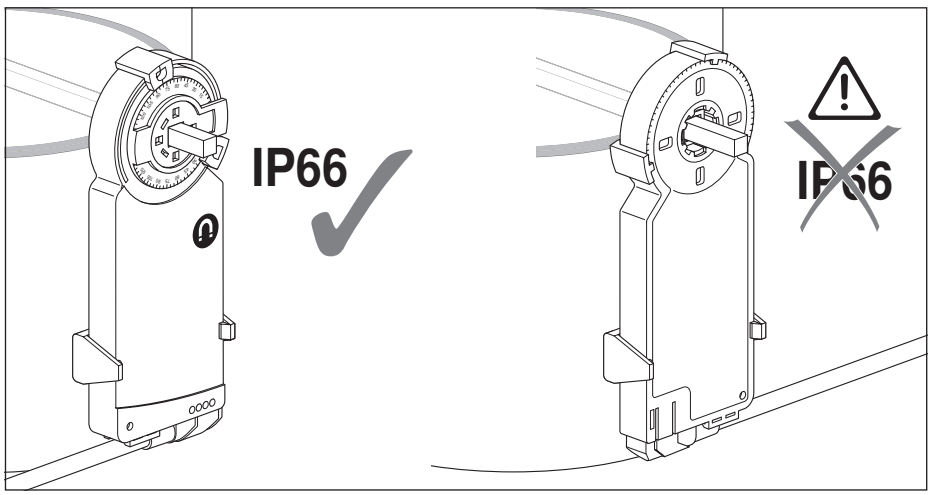

2

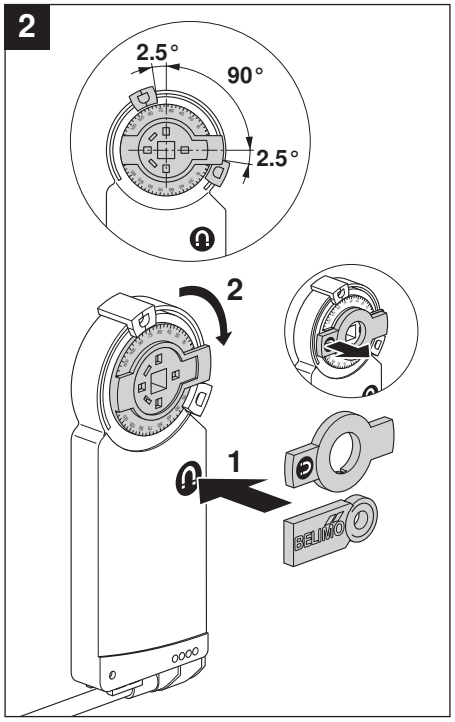

3

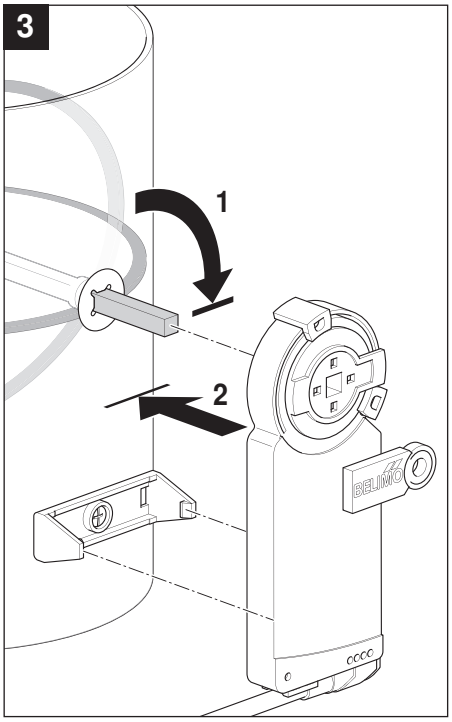

4

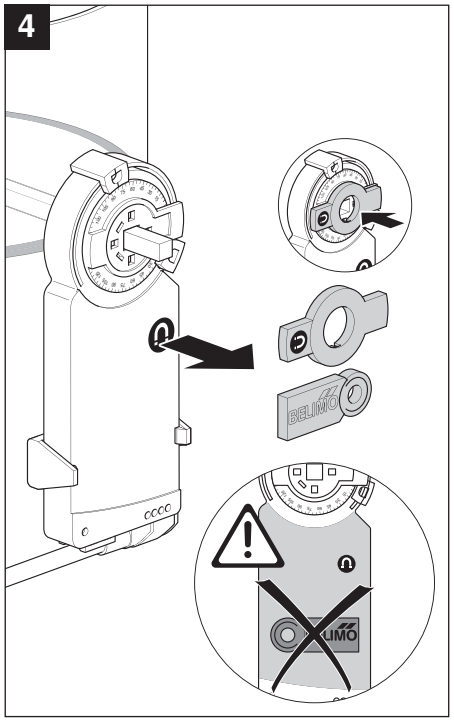

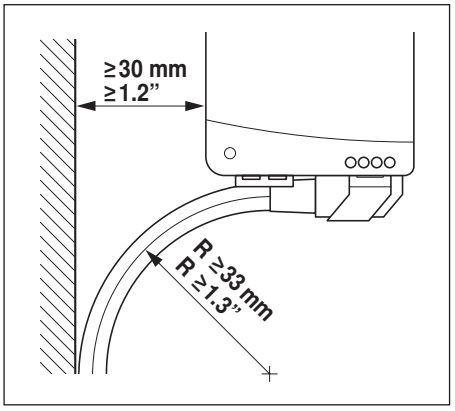

!

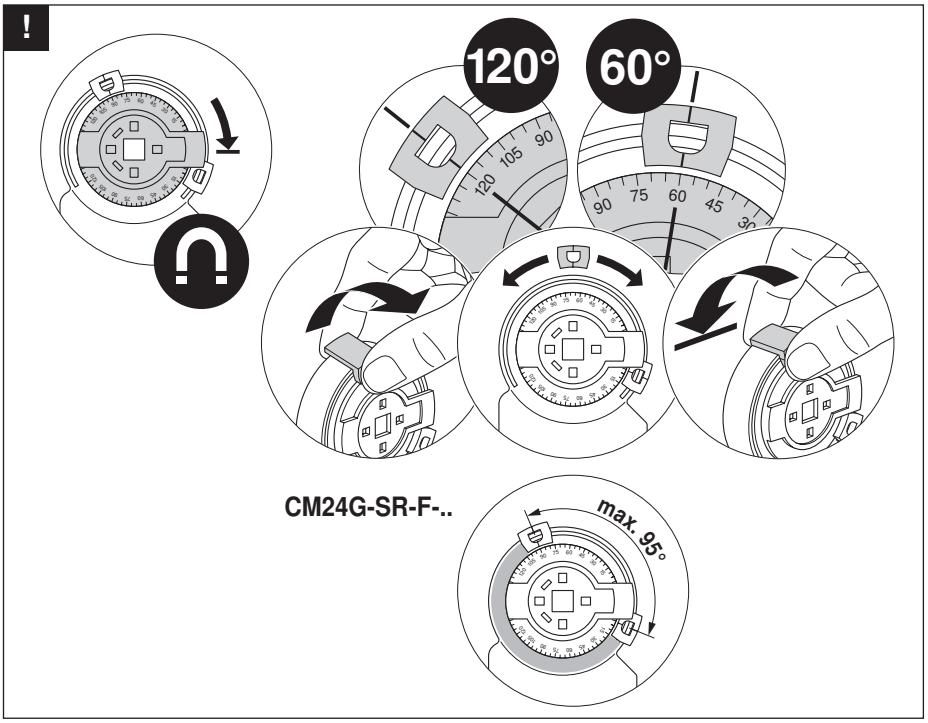

For latest prices and delivery to your door visit MyTub Ltd - 0845 303 8383 - www.mytub.co.uk - info@mytub.co.uk

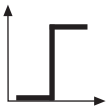

AC 24 V / DC 24 V

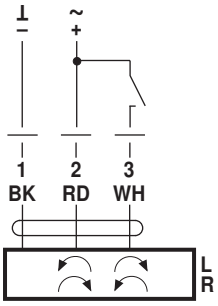

CM24G-F-..

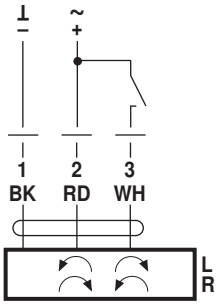

CM24G-F-..

AC 100 ... 240 V ⚠

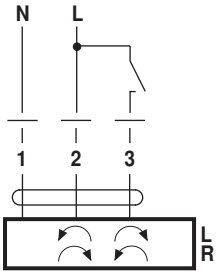

CM230G-F-..

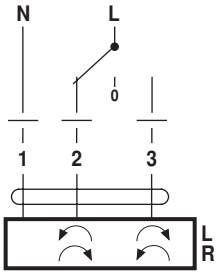

CM230G-F-..

AC 24 V / DC 24 V

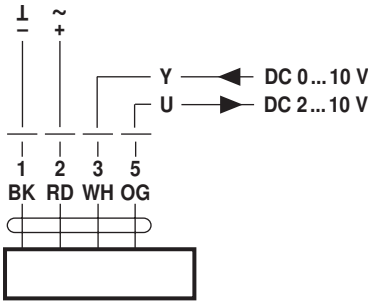

CM24G-SR-F-..

For latest prices and delivery to your door visit MyTub Ltd - 0845 303 8383 - www.mytub.co.uk - info@mytub.co.uk