washbasins

contour 21 - 37cm

Short projection wall mounted handrinse washbasin.

Suitable for public areas and special care applications.

- *Commercial, healthcare use*
- *Short projection*
- *Appropriate for Doc M*
- *3 different taphole options*
- *37cm x 30cm*

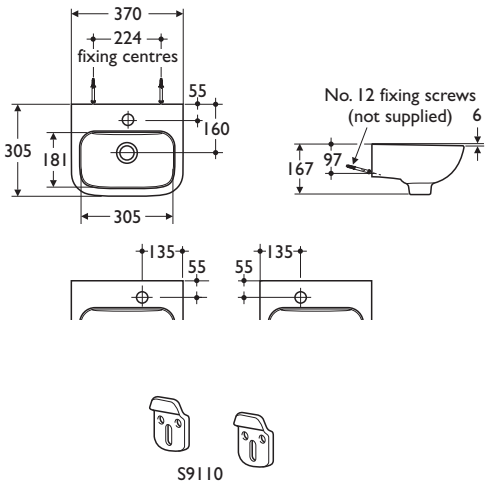

Illustrated
S2122 Contour 21 37cm hand rinse basin, centre taphole no overflow or chain hole
A4169AA Contour 21 basin mixer thermostatic sequential, long lever, fixed copper tails, chromium plated
S8810 1¼in plastic dished strainer waste 80mm unslotted tail
S8900 1¼in metal bottle trap, 75mm seal, chromium plated
S9110 Concealed hangers

Material
Vitreous china

Weight
Washbasin 6.3kg

Colours
Available in White (01) only

Standards
Vitreous china to BS 3402

Options
S8720AA 1¼in chromium plated, brass strainer waste, 80mm unslotted tail
S8920 self colour, 1¼in plastic resealing bottle trap with 75mm seal
A4131AA Contour 21 basin mixer thermostatic sequential, long lever, chromium plated
S2218 Contour 21 37cm hand rinse basin, right hand taphole no overflow or chain hole
S2217 Contour 21 37cm hand rinse basin, left hand taphole no overflow or chain hole

Special Notes
Recommended fixing heights (floor to front rim);
Nursery use 600mm
Infant use 700mm
Junior use 750mm
Senior/adult use 780-800mm

For latest prices and delivery to your door visit MyTub Ltd 0845 303 8383 www.mytub.co.uk