STUART TURNER LTD

Submersible Pumps

OPERATING INSTRUCTIONS

Please leave this instruction booklet with the pump as it contains maintenance and safety information.

SUBMERSIBLE MODELS

Waste Water Models	Dirty Water Models	Clean Water Models
Supersub 460A	Supervort 550A Supervort 560A	Diver 3 Diver 4

INDEX ..... Page No

Application 2
Product Description 3
Limits of Application 4
Technical Specification 4
Connections 5
Siting of the Pump 6
Pipework 8
Electrical Installation 8
Noise 11
Commissioning 11
Maintenance 11
Trouble Shooting Guide 14
Environment Protection 15

IMPORTANT NOTES

- **Please read these instructions fully before starting the installation:**
- **The installation must comply with the relevant water supply, electrical and building regulations and be installed by a competent person.**
- **If in doubt, consult Stuart Turner Ltd.**

APPLICATION

- **This pump set must not be used for any other application without the written consent of Stuart Turner Limited and in particular, must not be connected directly to the mains water supply or used outside the conditions specified in the limits of application.**
- **This appliance is not intended for use by persons (including children) with reduced physical, sensory or mental capabilities, or lack of experience and knowledge, unless they have been given supervision or instruction concerning use of the appliance by a person responsible for their safety.**
  Children should be supervised to ensure that they do not play with the appliance.

General

The submersible pump range is designed for re-circulation, drainage and transfer of fresh water in outdoor or indoor applications.

Model types within the range which have the suffix 'A' incorporate an adjustable float switch assembly which provides automatic pump control.

An optional foam pre-filter is available for the Supersub model - contact Stuart Turner Ltd for further details.

Supersub Range

This model is suitable for clean water, rain water or waste water applications.

Note: Waste water is water that has been used in the home except water from toilets eg. dish, shower and laundry water.

Supervort Range

These models are suitable for dirty water applications and are capable of handling semi-solids in suspension of up to 20 mm in diameter. They are also suitable for all applications specified in the Supersub range.

Diver range

This model range has high head (pressure) capabilities and is suitable for clean water applications only.

PRODUCT DESCRIPTION

Electric motor driven submersible pump with float switch control on selected models.

Motor

All motors are induction type, permanent capacitor, fitted with integral auto-resetting thermal overload protection, IP68 enclosure, class 'B' insulation and continuously rated.

The motor is encapsulated in a casing and protected from water ingress by three separate lip seals running on a shaft sleeve, lubricated with a biodegradable vegetable oil.

Pump

All models are close coupled to the motor and are of centrifugal design and are supplied as standard with a stepped hose connector.

Both Supersub and Supervort are single stage units and are supplied pre-fitted with a 10 metre mains supply cord.

Diver 3 and 4 are three and four stage units respectively and are supplied as standard with a non-return valve and are pre-fitted with a 15 metre mains supply cord.

Standard pump materials of construction of major wetted parts are as follows.

Model	Body	Impeller	Shaft	Motor Encapsulent	Shaft Sleeve	Seal (Lip)
Supersub	Polypropylene	Noryl	Stainless Steel	Stainless Steel	Ceramic	Nitrile
Supervort	Polypropylene	Noryl	Stainless Steel	Stainless Steel	Ceramic	Nitrile
Diver	Polypropylene	Noryl	Stainless Steel	Stainless Steel	Ceramic	Nitrile

Cont....

Float Switch

Factory fitted assembly for automatic pump control, provided as standard on Supersub and Supervort range. The wetted materials of construction are polypropylene. The float switch is not available on the Diver range.

LIMITS OF APPLICATION

Model	Max. Liquid Temp. °C	Min. Liquid Temp. °C	Max. Immersion Depth (m)	Min. Immersion Depth (mm)	Max. No. Starts/h	Max. Head (pump closed valve) (m)
Supersub 460A	35	4	7	90	30	10.2
Supervort 550A	35	4	7	120	30	5.1
Supervort 560A	35	4	7	120	30	7.8
Diver 3	35	4	10	150	30	35
Diver 4	35	4	10	150	20	42

TECHNICAL SPECIFICATION

Model	Supply	Max. Watts consumed	Nominal Watts Output (Motor)	Full Load Current (Amps)	Enc. Rating	Duty Rating	Dims (mm)			Gross Weight (packed) kg	No of Pump Stages
							L	W	H		
Supersub 460A	230/1/50	730	510	3.3	IP68	Continuous	155	140	325	7.2	1
Supervort 550A	230/1/50	320	225	1.4	IP68	Continuous	155	140	320	5.3	1
Supervort 560A	230/1/50	565	395	2.6	IP68	Continuous	155	140	355	7.1	1
Diver 3	230/1/50	810	565	3.7	IP68	Continuous	148	148	376	9.3	3
Diver 4	230/1/50	960	670	4.2	IP68	Continuous	148	148	400	9.5	4

Stuart Turner reserve the right to amend the specification in line with its policy of continuous development of its products.

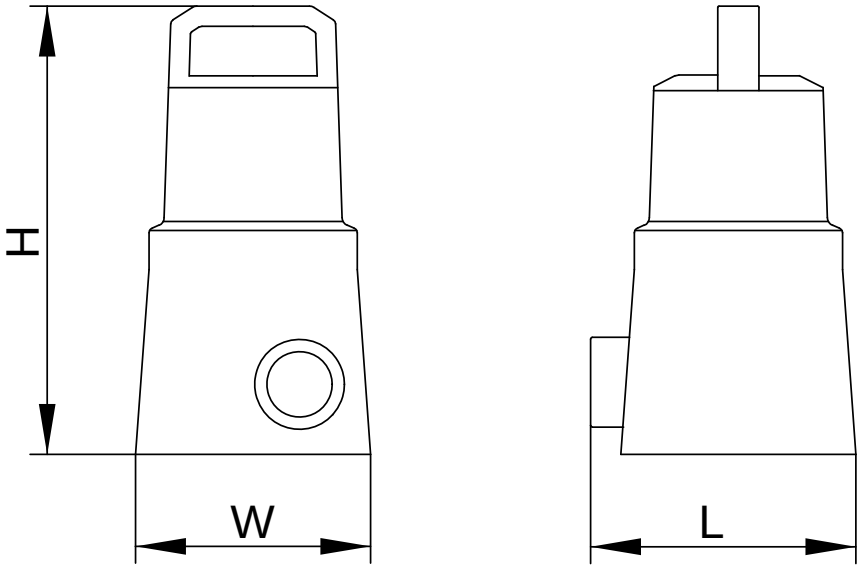

Fig. 1 (Dimension Key)

CONNECTIONS

Supersub and Supervort pumps are supplied with a stepped hose connector which can be screwed into the pump outlet port.

Diver pumps are supplied with a stepped hose connector and a non-return valve which should be screwed into the pump outlet port (Fig. 6).

Pump Type	Outlet	Hose Connector		Non-Return Valve
		Thread	Hose Bore	
Supersub	G1¼F	G1¼M	38/32/25	N/A
Supervort	G1¼F	G1¼M	38/32/25	N/A
Diver	G1F	G1M/G¾M	25/19	G1M/G1F

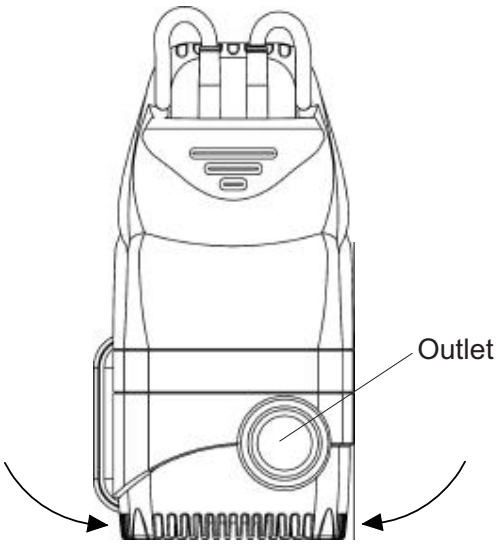

Fig. 2 Supersub

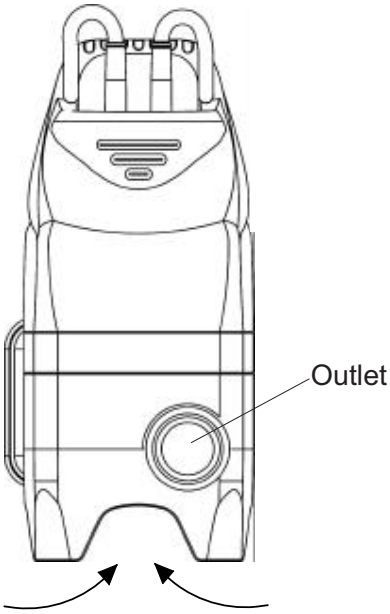

Fig. 3 Supervort

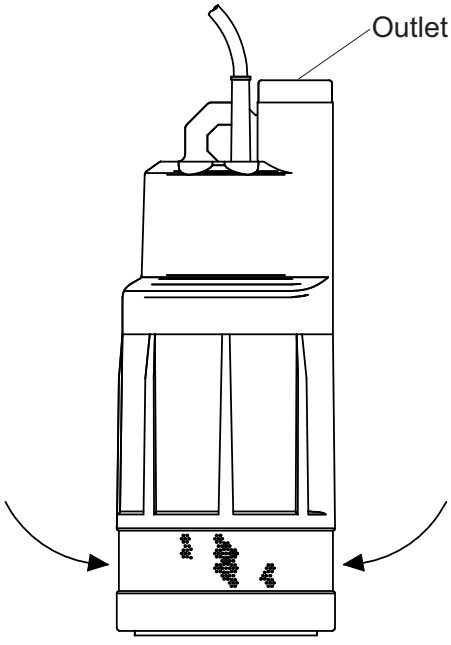

Fig. 4 Diver

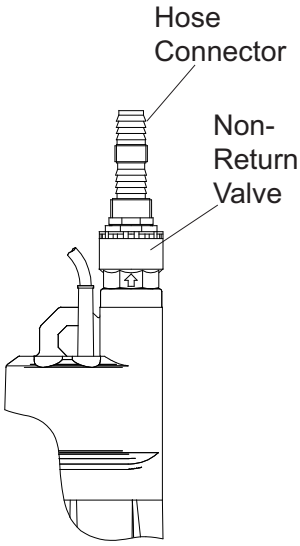

Fig. 5 Diver

SITING OF THE PUMP

WARNINGS:

- **Do not run against a closed valve for periods longer than 5 minutes.**
- **The water in and around the pump must not be allowed to freeze. This will result in pump damage.**
- **Do not under any circumstances use the supply cord fitted, as a means to carry or lower the pump into position on installation. Attach a rope sling to handle.**
- **Do not allow plastic pump parts to come into contact with solder flux, oil or cellulose based paints, paint thinners or strippers, acid based descalents or aggressive cleaning agents.**
- **Never run pump whilst sucking air/water as the motor will overheat. To prevent this happening always install pump in the vertical position and ensure fully submerged.**
- **When siting the pump ensure its base is raised slightly from the bottom of the sump reducing the possibility of blocking the filter with debris or drawing in small stones.**

General

The pump must be installed in the vertical position and must be fully submerged at all times to avoid overheating of the motor. Float switch controlled pumps may be operated partially submerged for short periods (see float switch operation section for further details).

The pumps should be positioned away from pond plants (if applicable) to maximise flow and prevent entanglement.

Diver

When siting these pumps in a location where organic or general debris is likely, ensure the base is raised slightly from the bottom of the sump (eg. on a flat paving slab) to prevent the integral inlet filter grille being frequently blocked with debris.

If the pump is not to sit on the bottom of the sump, or it is too deep, then it should be suspended by a rope attached to the lifting eye or handle located on top of the pump.

Supersub

When siting this pump in a location where organic or general debris is likely, ensure the pump is placed on its base on a flat horizontal surface (eg. on a paving slab) to enable full functionality of the primary inlet filter grille, which in turn will prevent the secondary inlet filter grille from being frequently blocked.

Supervort

When siting these pumps in a location where organic or general debris is likely, ensure the base is raised slightly from the bottom of the sump (eg. on a flat paving slab) to prevent the force of the pump from drawing in small stones. **This will result in pump damage.**

Float Switch Operation

Selected models which include the suffix ‘A’ after the model number, are fitted with float switches for automatic operation.

The following guide will help you get the most out of your pump.

The pump must never run dry, needing a minimum water depth of 90 mm on the Supersub model and 100 mm on the Supervort models, at all times.

Adjustment of the float switch is achieved by lengthening or shortening the cable through the moulded cable retention slot, which is located in the pump handle (Figs 6 and 7).

Note: When inserting cable into slot ensure it is fully engaged.

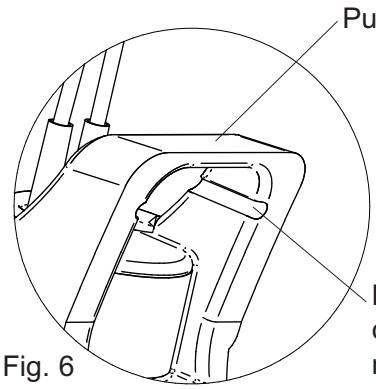

Fig. 6

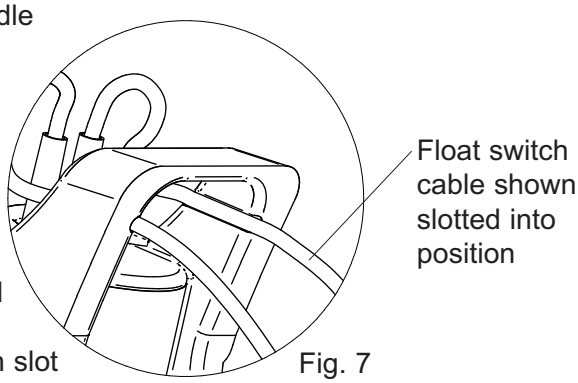

Fig. 7

If modification of the level setting is required refer to Figures 8 and 9 and the following chart.

Use of a Stuart non-return valve, Part No 26702 is recommended on the discharge side to limit back flow and pump surging when draining small areas.

If the pump is required to drain, for instance, a cellar, then it must be installed in a sump, having sufficient dimensions for the float switch to operate freely (Fig. 10), retaining a minimum water depth as previously stated. The pump is continuously rated when fully submerged but should only be run for short periods (10 mins) when the water drops to the minimum level. The number of starts should not exceed 30 per hour.

Note: It is not possible to empty the sump completely, a minimum depth must remain (Figs. 8 & 9).

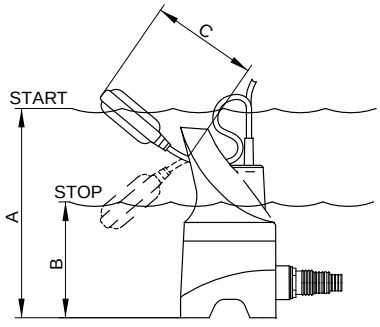

Fig. 8 Min. Float Switch Movement

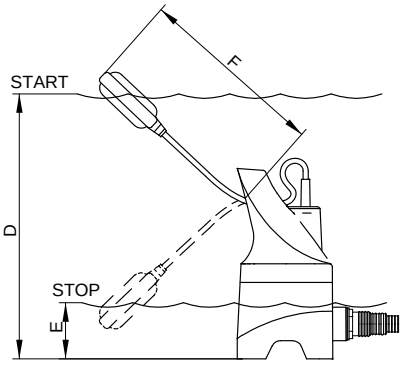

Fig. 9 Max. Float Switch Movement

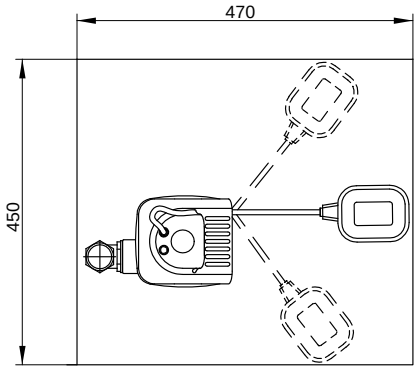

Fig. 10 Min. Size Of Sump

	A	B	C	D	E	F
PUMP TYPE	START (MIN.ADJ)	STOP (MIN.ADJ)	CABLE (MIN.ADJ)	START (MAX.ADJ)	STOP (MAX.ADJ)	CABLE (MAX.ADJ)
SUB 460A	400	200	220	480	90	350
VORT 550A	410	190	220	460	100	320
VORT 560A	440	230	220	490	100	330

Chart shows min. and max. float switch adjustment

PIPEWORK

WARNING

Ensure pipework from pump is independently supported to prevent forces being transferred to outlet branch.

General

All models are supplied with a stepped hose connector (see pump connection section for details) which can be screwed directly into the pump discharge connection.

The hose connector is suitable for a range of flexible hose sizes and can be cut to suit the selected size. For best flow use the largest bore pipe possible minimising 90° bends. Small pipe sizes will reduce the pump performance.

The discharge pipework must be independently supported to prevent forces being transferred to the pump outlet branch.

Diver

These models are supplied with a non-return valve which should be screwed directly into the pump outlet port (see pump connection section for details). The purpose of the valve is to limit back flow and pressure on the pump and ensure discharge pipework is always primed with water.

ELECTRICAL INSTALLATION

WARNINGS:

- **The electrical installation must be carried out in accordance with the current national electrical regulations and installed by a competent person.**
- **A residual current device having a rated current not exceeding 30 mA MUST be installed in the supply circuit. This may be part of a consumer unit or a separate unit.**
- **Before starting work on the electrical installation, ensure the power supply is isolated.**
- **This appliance must be earthed.**
- **Isolate all appliances in the water from the electrical supply before putting your hands in the water.**
- **The power supply cord of this pump cannot be replaced. If the cord is damaged, the pump should be scrapped.**
- **If the pump is used to empty a swimming pool, the pump must not be used when people are in the water.**

The standard pumps are suitable for a supply of 230V, 1 phase, 50Hz. Other frequencies (60Hz) are available on certain models and it is therefore very important to ensure the pump rating plate details match the supply.

All motors are thermally protected by an integral auto-resetting thermotrip and are rated for continuous use.

Earthing

This appliance must be earthed via the supply cord.

Electrical Connection (Supersub & Supervort range)

The motor is provided with a factory fitted supply cord and plug. This must be connected to the mains supply via a 13 Amp double pole switched, socket outlet in compliance with BS 1363-2.

The socket outlet should be mounted in an easily accessible position and should be labelled if confusion is possible, to allow easy identification of the pump isolating switch.

Electrical Connection (Diver range)

The motor is provided with a factory fitted supply cord with bared ends. This must be permanently connected to the fixed wiring of the mains supply. Means for disconnection must be incorporated in the fixed wiring in accordance with the wiring rules.

A suitable method of connection would be via a double pole switched, fused connection unit complying with BS 1363-4, protected with a fuse (see fuse section).

The connection unit should be mounted in an easily accessible position and should be labelled if confusion is possible, to allow easy identification of the pump isolating switch.

Wiring (Supersub & Supervort range)

The moulded plug fitted to this appliance is not waterproof - keep dry.

The supply cord is factory fitted with a moulded plug incorporating a fuse, the value of which is indicated on the pin face of the plug. Should the fuse need to be replaced, an ASTA approved BS 1362 fuse must be used of the same rating, marked thus, ASTA. If the fuse cover is detachable, never use the plug with the cover omitted. If a replacement fuse cover is required, ensure it is of the same colour as that visible on the pin face of the plug (i.e. red or orange).

If the plug supplied is not suitable for your socket outlet, it should be cut off and destroyed.

WARNING: A plug with bared flexible cords is hazardous if engaged in a live socket outlet.

The end of the flexible cord should be suitably prepared and correct plug fitted, as follows:

The wires in this mains lead (supply cord) are coloured in accordance with the following code:

Green & Yellow: Earth Blue: Neutral Brown: Live

As these colours may not correspond with the coloured markings identifying the terminals in your plug, proceed as follows:

The wire which is coloured green and yellow must be connected to the terminal in the plug which is marked with the letter 'E' or by the earth symbol ⏚ or coloured green or green and yellow.

The wire which is coloured blue must be connected to the terminal which is marked with the letter 'N' or coloured black or blue.

The wire which is coloured brown must be connected to the terminal which is marked with the letter 'L' or coloured brown or red.

Wiring (Diver range)

The Wires in the mains lead (supply cord) are coloured in accordance with the following code:

Green and Yellow: Earth Blue: Neutral Brown: Live

As colours of the core in the new mains lead may not correspond with the coloured markings identifying the terminals in your connection unit, proceed as follows:

The wire which is coloured green and yellow must be connected to the terminal marked with the letter 'E' or by the earth symbol ⏚ or coloured green or green and yellow.

The wire which is coloured blue must be connected to the terminal marked with the letter 'N' or coloured black.

The wire which is coloured brown must be connected to the terminal marked with the letter 'L' or coloured red.

Fuses

The following fuse size should be used with the appropriate pump.

Model	**Fuse Size (Amps)**
All Models	13

Supply Cord Replacement

The power supply cord of this pump cannot be replaced. If the cord is damaged, the pump should be scrapped.

Float Switch Cord Replacement

The float switch cord cannot be replaced. If the cord is damaged the pump should be scrapped.

Supply Cord Extension (Pump)

The pumps are fitted with a supply cord suitable for outdoor and underwater use. The cord specification is as follows:-

Pump Type	**Cord Type**	**Cord Length (m)**
Supersub 460A	HO5RN-F3 G 0.75 mm²	10
Supervort 550A	HO5RN-F3 G 0.75 mm²	10
Supervort 560A	HO7RN-F3 G 1 mm²	10
Diver 3	HO7RN-F3 G 1 mm²	15
Diver 4	HO7RN-F3 G 1 mm²	15

If an extension cord is necessary a cord of the proper type and rating must be used.

In general for 230 volt pumps on distances up to 40 metres (inclusive of original cord length) the same specification cord as fitted to the pump can be used. For distances above 40 metres a larger cord size may be required due to voltage drop and advice must be obtained based upon installation details.

Any connectors or junction boxes must be specifically suited for outdoor use and installed in accordance with manufacturers instructions.

Any cable routed underground must be protected to local standards.

Float Switch Cord Extension (applicable models only)

The float switch cord cannot be extended.

NOISE

The equivalent continuous A-weighted sound pressure level at a distance of 1 metre from the pumpset does not exceed 70 dB(A).

COMMISSIONING

WARNING:

- **The pump chamber must be full of water at all times. Damage will result if pump runs dry.**

1. The pump must be fully submerged before starting. Take care when submerging the pump to ensure all air is purged from the casing. This is done by slowly submerging the pump and gently agitating whilst doing so. This will enable any trapped air pockets to be released.
2. Turn on the electrical supply and water movement should be immediately evident from pump outlet. If it is not, repeat step 1.

For Further Technical Support

Note: When pumps are installed in OEM equipment, please contact the OEM manufacturer for advice.

Phone the Stuart Turner support line on 01491 572655. Our staff are trained to help and advise you over the phone.

MAINTENANCE

WARNING

The water in and around the pump must not be allowed to freeze. This will result in pump damage.

Provision should be made for easy access to the pump to allow for regular maintenance.

The integral inlet filter grille and any additional pre-filters should be checked periodically and cleaned if required. It is important the filters are clean and free from debris which in turn ensures the pump will always run at maximum efficiency. A blocked filter can cause damage to the pump.

The pump must be cleaned as follows:-

Supersub Range

1) Disconnect electrical supply before working on pump.
2) Release system pressure from pipework and remove pump from water (do not use cable to lift pump).
3) Clean integral primary and secondary inlet filter grilles using water pressure from a hose pipe (Fig. 11).
4) Refer to commissioning section for instructions on re-starting pump.

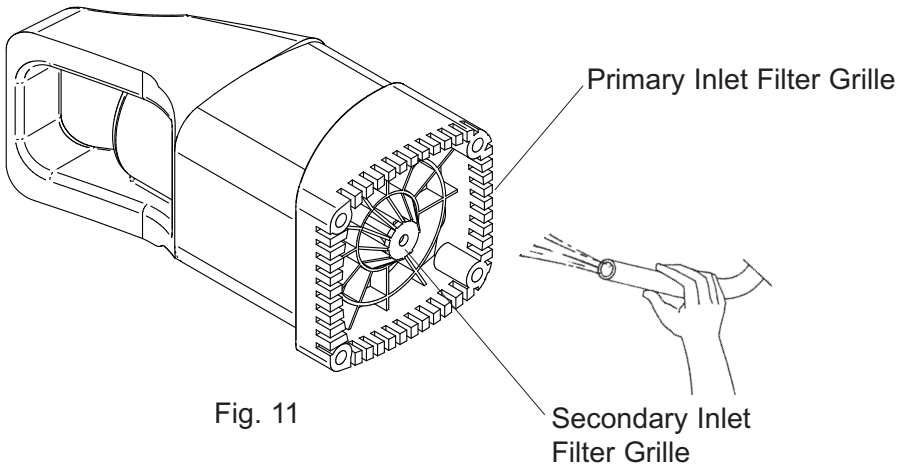

Fig. 11

Supervort Range

1) Disconnect electrical supply before working on pump.
2) Release system pressure from pipework and remove pump from water (do not use cable to lift pump).
3) Clean footstool using water pressure from a hose pipe (Fig. 12).
4) Refer to commissioning section for instructions on re-starting pump.

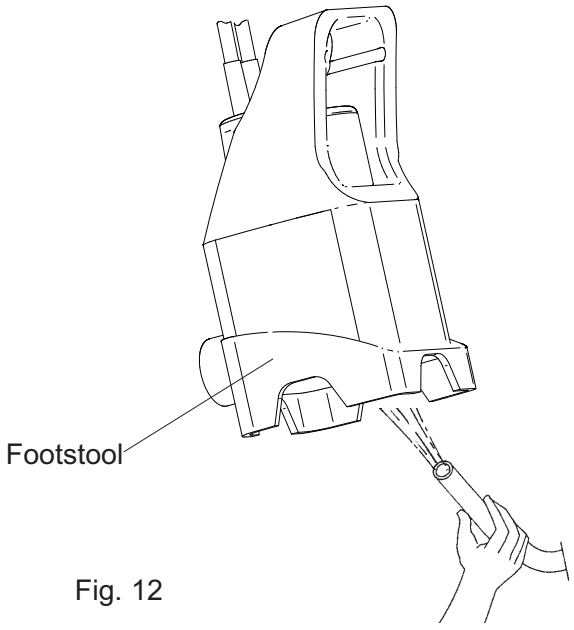

Fig. 12

Diver Range

1) Disconnect electrical supply before working on pump.
2) Release system pressure from pipework and remove pump from water (do not use cable to lift pump).
3) Clean inlet filter grille using water pressure from a hose pipe.
4) Refer to commissioning section for instructions on re-starting pump.

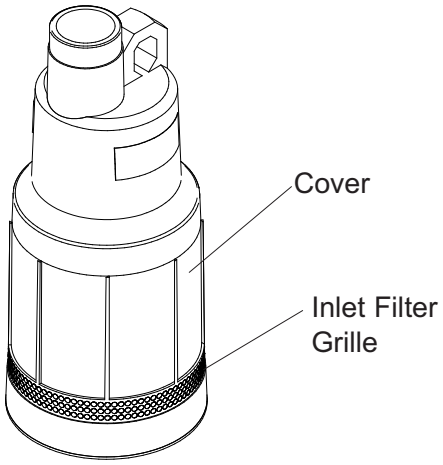

Fig. 17 Diver

STORAGE

If this product is not installed immediately on receipt, store in a frost and vibration free location in its original packaging.

TROUBLE SHOOTING GUIDE

Symptoms	Probable Cause	Recommended Action
Pump stops running.	Thermal overload protection has tripped.	Disconnect the power supply to the pump. Allow to cool for 30 mins. Check to ensure the pump is connected to the correct voltage supply. Check to ensure the impeller is not jammed and can rotate freely. Check to ensure water to be pumped does not exceed recommended temperature, ensure pump has not run dry and is fully submerged. Check probable causes and remedy, allow to cool, reinstall and connect cable.
Pump will not start.	Power not connected to the electricity supply. Impeller jammed. Float switch not working (if fitted).	Check the cable is connected correctly and power supply is switched on. Check fuse. Clean away debris from the impeller. Check the float switch by hand (do not attempt to dismantle float switch) for further advice contact Stuart Turner.
Pump runs but no water is supplied.	Low water level. Discharge pipe clogged. Suction filter blocked.	Ensure the pump is fully submersed below the water level. Ensure that the pump is not able to suck air in (low water level). Remove pipe and ensure the discharge is clear of any debris. Check inlet pre-filters (if fitted), are free from blockages.

ENVIRONMENT PROTECTION

Your appliance contains valuable materials which can be recovered or recycled.

At the end of the products' useful life, please leave it at an appropriate local civic waste collection point.

DECLARATION OF CONFORMITY

2006/95/EC

BS EN 60335-1, BS EN 60335-2-41, EN 50366

2004/108/EC

BS EN 55014-1, BS EN 55014-2, BS EN 55022, BS EN 61000-3-2, BS EN 61000-3-3, BS EN 61000-4-2, BS EN 61000-4-3, BS EN 61000-4-4, BS EN 61000-4-5, BS EN 61000-4-6, BS EN 61000-4-11

IT IS HEREBY CERTIFIED THAT THE STUART ELECTRIC MOTOR DRIVEN PUMP, COMPLIES WITH THE ESSENTIAL REQUIREMENTS OF THE ABOVE E.E.C. DIRECTIVES.

RESPONSIBLE PERSON
AND MANUFACTURER

STUART TURNER LIMITED
HENLEY-ON-THAMES, OXFORDSHIRE
RG9 2AD ENGLAND.

Signed ..... Customer Relationship Manager

Stuart Turner are an approved company to BS EN ISO 9001:2000

YOUR 1 YEAR GUARANTEE

Submersible Pumps are guaranteed by Stuart Turner Limited to be free from defects in materials or workmanship for 1 year from the date of purchase. Within the guarantee period we will repair, free of charge, any defects in the pump resulting from faults in material or workmanship, repairing, exchanging parts or exchanging the whole unit as we may choose.

Not covered by this guarantee: Damage arising from improper use, unauthorised repair, normal wear and tear and defects which have a negligible effect on the value or operation of the pump.

Reasonable evidence must be supplied that the product has been purchased within 1 year prior to the date of claim.

This guarantee is in addition to the purchaser's rights under any legislation presently in force.

In the event of a claim please telephone Stuart Turner Ltd. on 01491 572655 or return pump with accessories removed.

Proof of purchase should accompany the returned unit to avoid delay in action.

STUART TURNER LTD

Stuart Turner Ltd, Henley-on-Thames, Oxfordshire RG9 2AD ENGLAND
Tel: +44 (0) 1491 572655, Fax: +44 (0) 1491 573704
email: pumps@stuart-turner.co.uk web: www.stuart-turner.co.uk
V.A.T. REG. No. 199 0987 92. Registered in England No. 88368. Registered Office: Market Place, Henley-on-Thames

Issue No. 2809/2-06 **Pt. No. 18504**