healthcare

HTM64

healthcare

HTM64 (DU) leven ti slop hopper

DU stainless steel hopper, with earthing terminal.

See special notes and bi version for HTM64 (2006) preference.

- *Domestic services disposal unit*
- *Screw to wall*
- *Stainless steel*

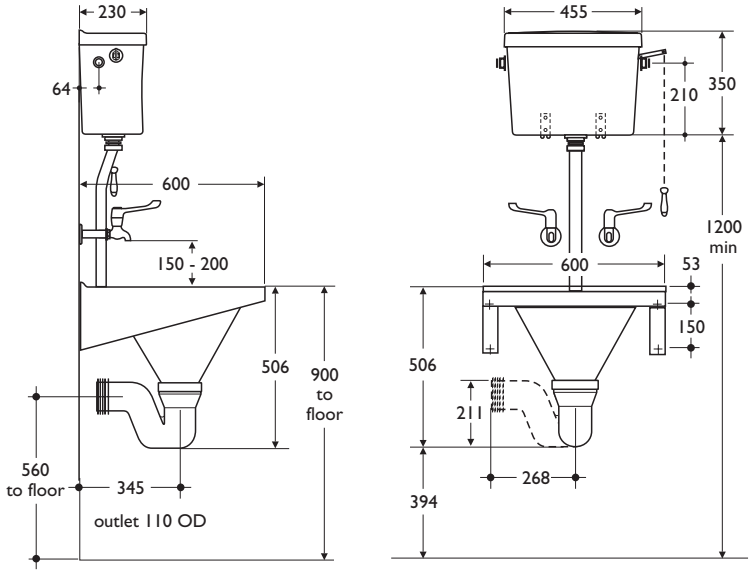

Illustrated

S6526 (DU) Leven slop hopper in stainless steel
S358401 Plastic P trap, white
S3955 Clena high level cistern & cover, 6 litre capacity with Freeflo plastic syphon fittings, ½in Microvalve HP/LP side supply ballvalve, internal overflow, chain and pull
S4590 9 litre conversion set
S4662 one piece plastic flushpipe
S8270 (TBH1) Markwik ½in lever action bib taps
S8347 100mm extensions
S8336 ½in wall mounts for concealed plumbing

Material

Stainless steel type 1.4301 (304)
Hopper 1.5mm

Weight

Sink 21.0kg

Finish

Exposed surfaces polished with 240 grain

Standards

Stainless steel sheet conforms to BS EN 10088:Part 2:2005
Other items to relevant standards

Options

S358501 Plastic S trap, white
S3586MY Stainless steel P trap
S3587MY Stainless steel S trap
S9272 stainless steel legs to floor (2 required)

Special notes

For the disposal of liquid and solid waste in connection with clinical procedures.
HTM64 does not cover for the provision of leg supports to floor

Note 2.94 states that "Exposed services are visually unattractive, can be unhygienic and are difficult to clean and decorate. Indeed the additional cost of the latter over a number of years may well exceed any savings in intial capital costs"

HTM64

For latest prices and delivery to your door visit MyTub Ltd 0845 303 8383 www.mytub.co.uk