urinals

aridian waterless

Vitreous china waterless bowl urinal with shrouded outlet and special cartridge.

Saves water, can reduce maintenance costs, is easy to install and requires no cistern or flushpipe.

- *Shrouded outlet*
- *Water saving (87,000 litres pa*)*
- *Cost saving*
- *Hygenic*
- *For exposed or concealed waste pipe*

Illustrated
S6321 Aridian vitreous china waterless bowl urinal, shrouded outlet renewable cartridge with outlet adapter, fixing hangers and toggle bolts
S6120 vitreous china division with hanger and screw

Material
Vitreous china

Weight
Urinal 15.5kg
Division 8.0kg

Colours
Available in White (01) only

Standards
Vitreous china to BS 3402.
WRAS approval pending

Options

Associated products
S6282 Replacement cartridge
S6283 Replacement cartridges in boxes of 32

Special notes
Cartridges last for approximately 7,000 uses.
Installers must ensure that urinals are connected to wastepipe systems which are adequately vented.
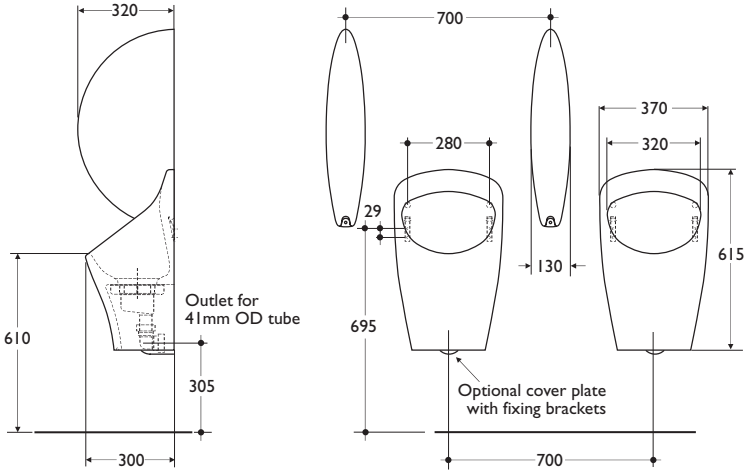
* Estimated saving per bowl, per year based on conventional urinal flushing, 24 hours per day, 365 days per year